Research Journal of Applied Sciences, Engineering and Technology 1(3): 125-131, 2009
ISSN: 2040-7467

Submitted Date: June 25, 2009 Accepted Date: July 18, 2009 Published Date: October 20, 2009

Evaluation of Artificial Neural Network Performance in Predicting Diesel Engine No_x Emissions

O. Obodeh and C. I. Ajuwa
Mechanical Engineering Department, Ambrose Alli University, Ekpoma, Edo State, Nigeria

Abstract: Diesel engine is becoming increasing popular due to its high efficiency and durability. Considering the most important greenhouse gas, carbondioxide (CO_2), the diesel engine is superior to gasoline engine. Unfortunately, the diesel engine emits high level of oxides of nitrogen (NO_x). Close control of combustion in the engine will be essential to achieve ever-increasing efficiency improvements while meeting increasingly stringent emissions standards. As new degrees of freedom are created, due to advances in technology, the complicated processes of emission formation are difficulty to assess. Artificial neural network (ANN)-based engine modelling offers the potential for a multidimensional, adaptive, learning control system which does not require knowledge of the governing equations for engine performance or the combustion kinetics of emissions formation that a conventional map-based engine model require. This paper evaluates the capabilities of ANN as a predictive tool for multi-cylinder diesel engine NO_x emissions. The experiments were carried out with a stationary light-duty Nissan diesel engine test-rig designed and assembled to allow testing of the engine in a laboratory environment. Standard laboratory procedures were used to measure the engine operating parameters and its tailpipe emissions. ANNs were trained on experimental data and used to predict the oxides of nitrogen (NO_x) emissions under various operating variables. Fraction of variance (R^2) and mean absolute percentage error (x) were used for comparison in the sensitivity analysis. The Levenberg-Marquardt (LM) algorithm with 11 neurons produced the best results. Among the examined combinations of learning criteria in different architectures of backpropagation (BP) designs, a set of 0.05, 0.05 and 0.3 for learning rate, momentum and weight respectively, gave the best-averaged accuracy. For pre-specified engine speeds and loads with LM algorithm, x were found to be between 0.68 and 3.34%.

Key words: Artificial neural networks, capabilities, multi-cylinder diesel engine and NO_x emissions

INTRODUCTION

In the foreseeable future, diesel engines will continue to be used in fuel cost-sensitive applications such as heavy-duty (HD) buses and trucks, power generation, locomotives and off-road applications (Tatur *et al*., 2007). Close control of combustion in these engines will be necessary to achieve efficiency improvements while meeting increasingly stringent emissions standards (Rakopoulos *et al*., 2005). Future diesel engines will utilize increasingly higher combustion and injection pressures with exhaust gas recirculation (EGR) (to offset the higher NO_x levels produced by the elevated combustion pressures), variable geometry turbocharging and possibly infinitely variable valve timing and aftertreatment devices such as catalytic traps, while being truly low emissions and fuel-flexible (Kalogirou, 2003; Rice *et al*., 2008; Sekemen *et al*., 2004).

These engines of the future will require significantly more complex control than existing map-based control strategies, having more degrees of freedom than those of today. Standard classical "one-dimensional" or map-based diesel engine control will prove woefully inadequate in dealing with the multiple independent degrees of freedom presented by fuel injection rate shaping, EGR, boost and valve control in future diesel engines. Moreover, the costs, time required, and complexity associated with engine development, performance mapping, and control system development and calibration are increasing significantly. What is required is a multidimensional, adaptive, learning control system that does not require the laborious development of an engine model while having excellent performance and emissions prediction capabilities across the fuel life of the engine, for all engine-operating conditions. Artificial neural network (ANN) – based virtual sensing offers all of these capabilities (Howlett *et al*., 2005; He and Rutland, 2004).

ANN models may be used as alternative way in engineering analysis and predictions. They are recently used also in engine optimization regarding engine operating parameters and emissions (Alonso *et al*., 2007; Wu *et al*., 2006; Hafner *et al*., 2002; Desantes *et al*., 2005; Kesgin, 2004; Delagrammatikas and Assanis, 2004). ANN models mimic somewhat the learning process of a human brain. They operate like a "black box" model, requiring no detailed information about the system. Instead, they learn the relationship between the inputs parameters and the controlled and uncontrolled variables by studying previously recorded data, similar to the way a nonlinear regression might perform (Hashemi

Corresponding Author: O. Obodeh, Mechanical Engineering Department, Ambrose Alli University, Ekpoma, Edo State, Nigeria

and Clark, 2007; Clark *et al*., 2003; Sekemen *et al*., 2006). Another advantage of using ANNs is their ability to handle large and complex systems with many interrelated parameters. They seem simply to ignore excess data that are of minimal significance and concentrate instead on the more important inputs (Wu *et al*., 2006). The excellent generalization capabilities that are achieved through online learning means the engine control system designer need make no assumptions about the governing equations dictating the engine performance and combustion characteristics. The ANN-based engine model is able to automatically develop the engine behaviour over time, allowing a truly optimized and adaptive engine control system to be developed with minimum effort (Alonso *et al*., 2007; Hafner *et al*., 2002).

Due to the capability of the ANNs in solving non-linear problems, they have been the centre of attraction since the late 80's. Krijnsen *et al.* (1999) proposed the application of ANN as a precise tool to predict the engine's NO_x emission instead of using expensive NO_x analyzers and computer models. Data were collected from a transient operating diesel engine and part of the data was used to train the network, while the other part was used to test the NO_x emission prediction. A single-layer perceptron network with the inputs of engine speed, rack position, intake air pressure, intake air temperature and their rates of change was chosen for the study. The average absolute deviation between the predicted and measured NO_x emission was 6.7%. The work proved that the ANN is an accurate tool to predict the automotive NO_x.

Clark *et al.* (2002), in an effort to predict NO_x emissions for sixteen different chassis test schedules using three different methods, showed that the ANN models trained by axle torque and axle speed as input variables were able to predict NO_x emissions with 5% error. Traver *et al.* (1999) investigated the possibility of using in-cylinder, pressure-based variables to predict gaseous exhaust emissions levels from a Navistar T444 direct-injection diesel engine through the use of ANN. They concluded that NO_x and CO_2 responded very well to the method. NO_x in particular gave good results, because its production is a direct result of high temperature in the cylinder and that associates directly with high peak pressure, which was they main input.

Yuanwang *et al.* (2002) examined the application of a backpropagation neural network to predict exhaust emissions including unburned Hydrocarbon (HC), Carbonmonoxide (CO), particulate matter (PM) and NOx, cetane number was selected as an input and the effects of cetane improver and nitrogen were also analyzed. Desantes *et al.* (2002) suggested a mathematical model to correlate NOx and PM as a function of engine operating parameters and then simultaneously optimized a number of operating parameters to lower emissions. They implemented a wide range of inputs to their ANN including engine speed, fuel mass, air mass, fuel injection pressure, start of injcetion, exhaust gas recirculation (EGR) percentage and nozzle diameter to predict NOx, PM and BSFC (brake specific fuel consumption) for a single-cylinder direct injection engine turbocharged and aftercooled with common rail injection. They used a multi-layer perceptron with a backpropagation learning algorithm and they concluded that EGR rate, fuel mass and start of injection are the most relevant parameters for NO_x, PM and BSFC. They claimed that their suggested objective function performed successfully in the task of minimizing BSFC and maintaining the emission values below the required level.

The aim of this study is to evaluate the capabilities of ANN as a predictive tool for multi-cylinder diesel engine NO_x emissions without resorting to an engine model. To this end, combinations of learning criteria in different architectures of backpropagation (BP) designs were examined to obtain the one with the best-averaged accuracy.

MATERIALS AND METHODS

The ANN modelling used NO_x data that were obtained from a test-rig designed and assembled to allow testing of the engine in a laboratory environment. The test engine is a four-cylinder direct-injection diesel engine. The specifications of the engine and fuel used are as shown in Table 1 and 2 respectively.

The engine was run naturally aspirated in order to obtain repeatable inlet pressure shortly after start. The speed and the load of the research engine were controlled independently by a dynamometer and a fuel control system. Air flowrate was measured using a laminar flow element and fuel flowrate was measured using a positive displacement meter. Digital tachometer was used in engine speed measurements. Manifold temperatures and pressures were measured using thermocouples and strain-based pressure transducers respectively. Gaseous exhaust emissions were measured with the aid of pocket gas™ - portable gas analyzer.

Engine emission tests were performed at 1000 to 5000 rpm in steps of 500 rpm with various loading conditions of 25%, 50%, 75% and 100% of the load, where 504N load corresponds to 100%. Among the various kinds of ANN approaches that exist, the BP learning algorithm, which has become the most popular in engineering applications, was used in this study.

Artificial Neural Networks Modelling: The ANN was trained by adjusting the values of connections (weights). The objective was to obtain a specific output from a particular input. Standard BP is a gradient descent algorithm in which the gradient is computed for nonlinear multilayer networks (He and Rutland, 2004). The ANN parameters (weights and biases) were adjusted to minimize the sum of the squares of the differences between the actual values and network output values. The ANN was trained in a batch mode where its parameters were only updated after all the input-output pairs were

Table 1: Engine specifications

Make and Model	LD 20-D, Nissan diesel
Type	4-stroke cycle, in-line
Number of cylinder	4
Bore	95mm
Stroke	105mm
Displacement	2.0 x 10^{-3} m^3
Compression ratio	21:1
Air induction	Naturally aspirated, water cooled
Valves per cylinder	4
Number of nozzles	4
Fuel injection type	Bosch-type injection pump
Maximum power	80 kW at 3600 rpm
Maximum torque	196 Nm at 2200 rpm
Maximum speed	5000 rpm
Rotating inertia	0.148 kg m^2

Table 2: Fuel specifications

S/No.	Characteristics	Unit	Limit
1.	Specific gravity at 15/4	ºC	0.820 (max.)
2.	Distillation		
	(a)t 350ºC	% wt	90 (min.)
	(b) Final boiling point (FBP)	ºC	385 (max.)
3.	Colour	-	3 (max.)
4.	Flash point	ºC	66 (min.)
5.	Total sulphur	% wt	0.5 (max.)
6.	Copper corrosion for 3hrs at 100ºC	-	No. 1 strip (max.)
7.	Kinematics viscosity at 38ºC	mm/s	1.6 – 5.5
8.	Cloud point	ºC	5 (max.)
9.	Carbon residue (conradson) on 10% residue	%wt	0.15 (max.)
10.	Strong acid number	mg of KOH/g	Nil
11.	Total acid number	mg of KOH/g	0.05 (max.)
12.	Ash content	% wt	0.01 (max.)
13.	Water by distillation	% vol.	0.05 (max.)
14.	Water by extraction	% wt	0.01 (max.)
15.	Diesel index	-	47 (max.)

Source: (NNPC, 2005)

presented. The Levenberg-Marquardt (L-M) algorithm was employed for the training and the target performance goal (mean square difference between ANN output and target output) was set at 0.001. The maximum number of epochs (representation of the input/output pairs and the adjustment of ANN parameters) was set at 100.

The performance index for the BP algorithm and the least mean square (LMS) algorithm are identical (12) and defined as

$$\hat{F}(x) = [y(k) - z(k)]^2 = e^2(k) \tag{1}$$

where z (k) is the predicted value, y(k) is the actual value and e(k) is the error at iteration k.

The steepest descent algorithm with a constant learning rate (α) for the performance index is

$$W_{i,j}^{m}(k+1) = W_{i,j}^{m}(k) - \alpha \frac{\partial \hat{F}}{\partial W_{i,j}^{m}} \tag{2}$$

$$b_i^m(k+1) = b_i^m(k) - \alpha \frac{\partial \hat{F}}{\partial b_i^m} \tag{3}$$

where $W_{i,j}$ is a weight matrix and b_i is a bias vector.

The input to layer m is a function of the weight and bias in that layer. Using the chain rule and defining the sensitivity (s_i^m) of $\hat{F}$ to changes in the *ith* input at layer m by the following equation

$$s_i^m = \frac{\partial \hat{F}}{\partial n_i^m} \tag{4}$$

where

$$n_i^m = \sum w_{i,j}^m z_j^{m-1} + b_i^m \tag{5}$$

then, the BP algorithm can be expressed by

$$w_{i,j}^m(k+1) = w_{i,j}^m(k) - \alpha s_i^m z_j^{m-1} \tag{6}$$

$$b_i^m(k+1) = b_i^m(k) - \alpha s_i^m \tag{7}$$

The training algorithm used comprises specification of the initialization method, activation functions and the performance criterion. Some statistical methods, fraction of variance (R^2) and mean absolute percentage error (ξ) values were used for comparison in the sensitivity analysis.

Let

$$s_z = \sum_{i=1}^{n} (y_i - z_i)^2 \tag{8}$$

and

$$s_y = \sum_{i=1}^{n} (y_i + \bar{y})^2 \tag{9}$$

where y = actual value, z = predicted value of y, $\bar{y}$= mean of all the y values, n = total number of points.

$$R^2 = 1 - \frac{s_z}{s_y} \tag{10}$$

Root of mean square error (ε) is given by

$$\varepsilon = \sqrt{\left[\frac{1}{n}\sum_{1}^{n} (y - z)^2\right]} \tag{11}$$

The error measured, e_m is the instantaneous relative error expressed as the value of e divided by the range of the predicted value calculated from its minimum and maximum bounds.

$$\xi = \varepsilon_m \times 100 \tag{12}$$

The ANN used to predict the emission was trained with neural network toolbox in MATLAB 6.5. The BP network with various activation functions was selected. The hidden layer was discretized to three different parts with dissimilar transfer functions to identify different features in each pattern. For instance, the $f(x) = \exp(-x^2)$ fortified the middle range of the input while the $f(x) = 1 - \exp(-x^2)$ brought out meaningful characteristics in the extremes of the data. The number of inputs determined the number of neurons in the input layer. The numbers of neurons in the hidden layers were a function of input and output numbers and training patterns. Fig.1 shows the BP networks used in this research.

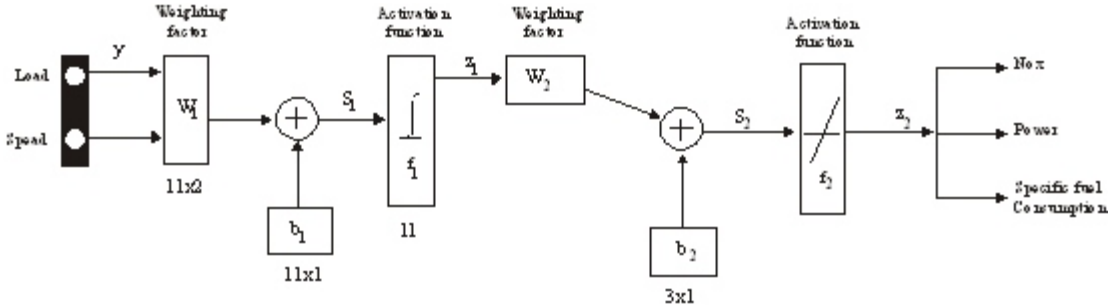

Fig 1: Selected ANN Model

Considering the known relationship (Sekemen *et al.*, 2006) between engine emissions and power, two variables of engine speed and load were chosen as major inputs for training the ANN. To obtain the best prediction of values, the number of neurons was increased step-by step from 8 to 15 in a single hidden layer. All experimental results at 33 different engine operating conditions were partitioned into two independent datasets: 23 cases for training, the other 10 for testing. The 23 cases were randomly chosen to form the training dataset, leaving the remaining 10 cases as the test dataset. Learning datasets were used to train the neural network to recognize patterns.

RESULTS AND DISCUSSION

Effects of the number of neurons in the hidden layer in NO_x ANN performance is shown in Fig.2.

The performance was measured in terms of the R^2 and the mean absolute percentage error (ξ). An initial improvement when increasing the number of neurons was obtained in the ANN performance. This behaviour can be explained because, as the number of neurons increases, the ANN ability to deal with more complex problems also increases. After the first rise, the trend is not maintained and small oscillations are produced because when more neurons are used, more weights need to be adjusted with the same training information (Alonso *et al.*, 2007). At a certain point, a balance between complexity of the problem and limited number of data available for the training is reached. The most adequate architecture was selected among MLP with 3 hidden layers and a number of neurons ranging from 3 to 15; smaller structures were too simple to provide good results in the problems studied. The upper limit was taken at 15 neurons because much more experimental tests were needed in order to obtain a proper adjustment of the higher number of weights (Alonso *et al.*, 2007). The criteria followed for the architecture choice was the highest averaged R^2 obtained. The resulting ANN architectures selected for NO_x was 11 neurons and 0.997 averaged R^2.

Figs. 3 and 4 showed the network prediction for NO_x and their deviations from measured values at 25% load condition as wireframe surfaces respectively, to provide easier visual evaluation of brake power and sfc influences on NO_x emissions. The mean absolute percentage error (ξ) inthe predicted values of NO_x were found to be in the

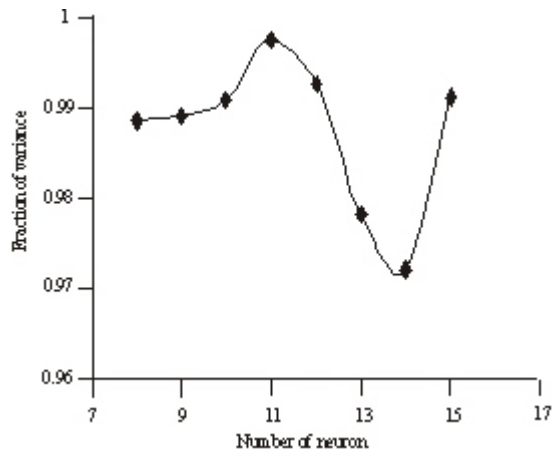

Fig 2: Effects of neuron numbers in the hidden layer on fraction of variance for NO_x ANN

range of 1.6% to 3.34%. This good predictive ability can be observed from Fig 4, indicating that the network was able to accurately learn the training data sets.

The network prediction for NO_x and their Deviations from measured values at 50% load condition are as shown in Figs. 5 and 6 respectively. The x in the predicted values of NO_x were in the range of 1.4% to 3.27%. The predictive ability of the network for 50% load condition was found to be satisfactory.

Figs.7 and 8 illustrate the 3-D plots of the network prediction for NO_x and their deviations from measured values at 75% load condition respectively. The x in the predicted values were in the range of 0.68% to 2.88%. Fig.8 depicts the good predictive ability of the network.

The results for the prediction of NO_x and their deviations from measured values at 100% load condition are presented as surface plots in Figs.9 and 10 respectively. The ξ in the predicted values were in the range of 0.7% to 2.8%. The predictions were in good agreement with the actual values. Fig. 11 presents the NO_x emission results of eight testing cases predicted by the trained MLP and experimental data.

However, there is an appreciable error in the predicted NO_x level at lower load condition, which is reduced slightly over time as the measured level increases slowly. This is due to thermal effects not considered in the

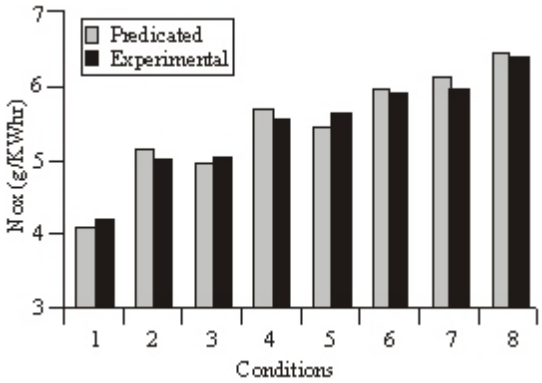

Fig.11: Comparison of experimental and ANN predicted results of NO_x

model such as warming of combustion chamber at lower load condition. The network had only inlet air and coolant temperatures available as inputs, both of which are only weakly related to combustion chamber temperature.

CONCLUSION

ANN models of a multi-cylinder direct injection diesel engine have been developed and validated. The neural network model of the engine was able to make highly complex, nonlinear and multidimensional associations between selected input parameters and outputs to allow acceptable degree of accuracy in the predictions of the engine torque, fuel consumption and NO_x across the full range of the engine operation. For a pre-specified engine speed and load, the models were shown to produce mean absolute percentage error (ξ) in the predicted values of NO_x in the range of 0.68 to 3.34%. However, there was an appreciable error in the predicted NO_x level at lower load condition, which was reduced slightly over time as the measured level increased slowly. This was due to thermal effects not considered in the models such as warming of combustion chamber at lower load condition. The networks had only air and coolant temperatures available as input, both of which are only weakly related to combustion chamber temperature.

The emission prediction of NO_x matched the measurement with high overall accuracy as evidence from the error analyses. Among the examined combinations of learning criteria in different architectures of BP designs, a set of 0.05, 0.05 and 0.3 for learning rate momentum and initial weight respectively gave the best-averaged accuracy. ANN modelling has proved to be an excellent tool to predict NO_x emissions from diesel engines.

REFERENCES

Alonso, J.M., F. Alvarruiz, J.M. Desantes, L. Hernández, V. Hernández and G. Moltó, 2007. Combining neural networks and genetic algorithms to predict and reduce diesel engine emissions. IEEE Trans. Evolut. Comput., 11(1): 46-55.

Clark, N.N., A. Tehranian, R.P. Jarrett and R.D. Nine, 2002. Translation of distance specific emissions rates between different heavy duty vehicle chassis test schedules, SAE Technical Paper No. 2002-01-1754.

Clark, N.N., P. Gajendran and J.M. Kern, 2003. A predictive tool for emissions from diesel vehicles. Environ. Sci. Technol., 37: 7-15.

Delagrammatikas, G.J. and D.N. Assanis, 2004. Development of a neural network model of an advanced, turbocharged diesel engine for use in vehicle-level optimization studies. J. Automobile Eng., 218: 521-523.

Desantes, J., J. Lopez, J. Garcia and L. Hernandez, 2002. Application of neural networks for prediction and optimization of exhaust emissions in a hd diesel engine. SAE Technical Paper No. 2002-01-1144.

Desantes, J.M., J.J. Lopez, J.M. Garcia and L. Hernandez, 2005. Multi-objective optimization of heavy-duty diesel engines under stationary conditions. J. Automobile Eng., 219: 77-87.

Hafner, M., M. Schuler and O. Nelles, 2002. Neural net models for diesel engines-simulation and exhaust optimization. Control Eng. Practice, 30(2): 402-412.

Hashemi, N. and N.N. Clark, 2007. Artificial neural network as a predictive tool for emissions from heavy duty diesel vehicles in Southern California. Int. J. Eng. Res., 8: 321-336.

He, Y. and C.J. Rutland, 2004. Application of artificial neural networks in engine modeling. Int. J. Eng. Res., 5(4): 281-296.

Howlett, R.J., P.A. Howson and S.D. Walters, 2005. Determination of air-fuel ratio in automotive ignition system using neural networks. IEEE Trans. Neural Networks, 41(1): 60-67.

Kalogirou, S.A., 2003. Artificial Intelligence for the modeling and control of combustion processes: A Review. Prog. Energy Combustion Sci., 29: 515-566.

Kesgin, U., 2004. Genetic algorithm and artificial neural networks for engine optimization of efficiency and no_x emission. Fuel, 83: 885-895.

Krijnsen, H.C., W.J. Van Kooten, H.A. Calis, R.P. Verbeek and C.M. Van den Bleek, 1999. Prediction of NOx emissions from a transiently operating diesel engine using an artificial neural network. Chem. Eng. Technol., 22: 601-607.

NNPC., 2005. Kaduna Refining and Petrochemical Co. Ltd., Technical Report, 4: 87.

Rakopoulos, C.D., D. Rakopoulos and C. Kyristsis, 2005. Development and validation of a comprehensive two-zone model for combustion and emissions formation in a diesel engine. Int. J. Energy Res., 27: 1221-1249.

Rice, M., J. Kramer, R. Mueller and K. Mueller-Haas, 2008. Development of an integrated NO_x and PM reduction aftertreatment system: SCRi^{TM} for advanced diesel engines. SAE Technical Paper No. 2008-01-1321.

Sekemen, Y., C. Cinar, P. Erduranli and E. Boran, 2004. The investigation of the effect of injection pressure and maximum fuel quantity on engine performance and smoke emissions in diesel engines. J. Polytech., 7: 321-326.

Sekemen, Y., M. Gölcü, P. Erduranli and Y. Pancar, 2006. Prediction of performance and smoke emission using Artificial Neural Network in a diesel engine, Mathe. Comput. Applic., 11(3): 205-214.

Tatur, M., M. Laermann, E. Koehler, D. Tomazic, T. Holland, D. Robinson, J. Dowell and K. Price, 2007. Development of an emissions control concept for an idi heavy-duty diesel engine meeting 2007 phase-in emission standards. SAE Technical Paper No. 2007-01-0235.

Traver, M.; Atkinson, R. and Atkinson, C. 1999. Neural Network-Based Diesel Emissions Prediction using In-cylinder Combustion Pressure, SAE Technical Paper No. 1999-01-1532.

Wu, B., R.G. Prucka, Z.S. Filipi, D.M. Krammer and G.L. Ohl, 2006. Cam-phasing optimization using artificial neural networks as surrogate models-fuel consumption and NO_x Emissions, SAE Technical Paper No. 2006-01-1512.

Yuanwang, D., Z. Meilin, X. Dong and C. Xiaobei, 2002. An analysis for effect of cetane number on exhaust emissions from engine with the neural network. Fuel, 81: 1963-1970.