Research Journal of Applied Sciences, Engineering and Technology 3(10): 1177-1181, 2011
ISSN: 2040-7467

Submitted: July 20, 2011 Accepted: September 25, 2011 Published: October 20, 2011

NLMS Algorithm with Orthogonal Correction Factors using Adaptive Gain for Adaptive Transversal Equalizers

L.I. Huxiong
Department of Automatic Control, Northwestern Polytechnical University, Xi'an 710072, China

Abstract: A normalized least mean square with orthogonal correction factors using adaptive gain (NLMS-OCF-AG) algorithm is proposed in order to improve the convergence rate and steady-state performance for adaptive transversal equalizers. The particular values of the step-size parameter are obtained that minimize the ensemble-average cost function by analyzing the estimated output-error. The experimental results show that the proposed algorithm has fast convergence rate and small steady-state error compared with the conventional NLMS-OCF algorithm.

Key words: Adaptive gain, equalization, least mean square with orthogonal correction factors

INTRODUCTION

The Affine Projection (AP) algorithm discovered by Ozeki and Umeda (Ozeki and Umeda, 1984) applies updates to the weights in a direction that is orthogonal to the most recent input vectors. This speeds up the convergence rate of the algorithm over that of the Normalized Least Mean Square (NLMS) algorithm. Reference (Rupp, 1998), based on the direction vector, gives a definition for the AP algorithm and presents the desirable decorrelation properties. Reference (Sankaran and beex, 2000), based on the idea that, the best improvement in weights occurs while the successive input vectors are orthogonal to each other, proposes the NLMS with orthogonal correction factors (NLMS-OCF) algorithm. These two algorithms-AP and NLMS-OCF-which are independently developed as a result of various interpretations and different perspectives, can be viewed as the same algorithm that updates the estimated weights on the basis of multiple input signal vectors. And the NLMS-OCF algorithm provides complete flexibility in choosing the past input vectors. This flexibility provides improved convergence rate over the AP algorithm.

Convergence performance of the adaptive filter algorithm, including mean-square deviation and misadjustment, are greatly dependent on the step-size parameter. Reference (Haykin, 2002) proposes the least mean square algorithm using adaptive gain, which improves the convergence performance by estimating the step-size parameter. Reference (Fan and Zhang, 2009) presents an improved variable step-size AP algorithm with exponential smoothing factor, in which an exponential function of the projected error norm is used as smoothing factor. Reference (Paleologu *et al.*, 2008) gives a variable AP algorithm for the acoustic echo cancellation, which aims to recover the near-end signal within the error signal of the adaptive filter and is robust against near-end signal variations. Reference (Lee *et al.*, 2008) proposes a robust pseudo affine projection algorithm with variable step-size, which not only has a much lower complexity but also provides performance comparable with the conventional algorithm. In this paper, the Normalized Least Mean Square with Orthogonal Correction Factors using Adaptive Gain (NLMS-OCF-AG) algorithm is proposed to find an estimate for the particular value of the step-size parameter that minimizes the ensemble-average cost function.

NLMS-OCF algorithm for adaptive transversal equalizer: We use the equalizer problem framework as established in (Ikuma *et al.*, 2008). The resulting equalization problem is depicted in Fig. 1. The equalizer is fixed to operate in the training mode-it has exact knowledge of what is transmitted. The above simplification was employed merely to make the current analysis tractable. The input signals are subject to several assumptions as follows. Both two input signals-xn and en are assumed to be complex random processes that are zero-mean, wide-sense- stationary, mean-ergodic, and proper. And these two input signals are mutually independent (Gonzalez-Rodriguez *et al.*, 2010).

The transversal equalizer structure is determined by two parameters: the number of input taps N and the desired signal delay Δ with respect to the most recent input sample u_n $x_n + \varepsilon_n$. The input process is converted into input vectors, via a tapped delay line, and is defined as:

$$u_n = e_n \quad u_{n-1} \cdots u_{n-N+1} U^T \tag{1}$$

where, $(.)^T$ is the transpose operator. The delay Δ for the desired signal must be chosen to be less than N.

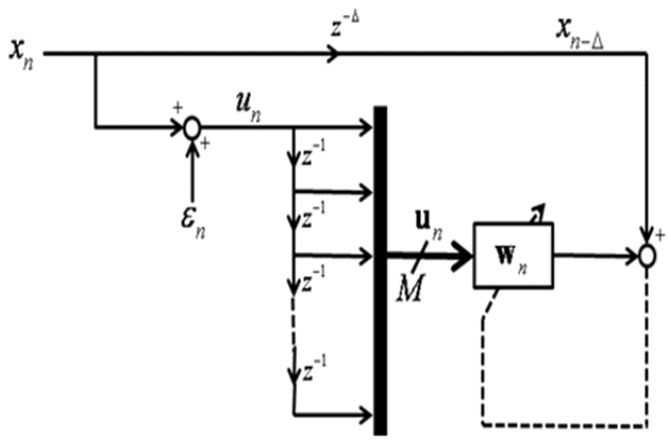

Fig. 1: Adaptive transversal equalization problem

The weight vector $W_n \in C^N$ is adapted using the NLMS-OCF algorithm. The number of the orthogonal correction factors is chosen as M<N. Based on the reference (Sankaran and Beex, 2000), under the situation that two inputs signals x_n and ε_n- are complex random processes that are zero-mean, wide-sense-stationary, mean-ergodic, and proper for the transversal equalizer structure, the NLMS-OCF algorithm can be rewritten as the steps from (2) and (6). The input vector u_n, which is subject to the l_2 norm, is computed as:

$$\|u_n\|^2 = \|u_{n-1}\|^2 + u_n^2 - u_{n-N}^2 \tag{2}$$

For j = 0, 1, 2, …, M, repeat the steps from (3) to (5). The corresponding estimation error signal is written as:

$$e_n^j = x^{n-D-j} - u_{n-j}^H w_n^j \tag{3}$$

where $(.)^H$ is Hermitian transpose. And the m_j is defined as:

$$m_j = \frac{m_n^j e_n^j}{\|u_{n-j}\|^2} \tag{4}$$

where, $m^j{}_n$ is the step-size parameter at the jth regression estimation of the nth instant. The estimate for the weights are defined as $w_n = w_n^0 = w_{n-1}^{M+1}$ and iterated as follows:

$$w_n^{j+1} = w_n^j + m_j u_{n-j} \tag{5}$$

At last, we set:

$$w_{n+1}^0 = w_n^{M+1} \tag{6}$$

NLMS-OCF algorithm analysis: For j = 0,2,…M, repeat the steps from (3) to (5), we have:

$$w_n^{M+1} = w_n^0 + m_0 u_n + m_1 u_{n-1+} \ldots + m_M u_{n-M} \tag{7}$$

Based on the definition $w_n = w_n^0 = w_{n-1}^{M+1}$ and (7), we obtain:

$$w_{n+1} = w_n + m_0 u_n + m_1 u_{n-1} + \ldots + m_M u_{n-M} \tag{8}$$

Substituting (4) into (8), yields:

$$w_{n+1} = w_n + \frac{m_n^0 e_n^1}{\|u_n\|^2} u_n + \frac{m_n^1 e_n^1}{\|u_{n-1}\|^2} u_{n-1} + \ldots + \frac{m_n^M e_n^M}{\|u_{n-M}\|^2} u_{n-M} \tag{9}$$

Using (3) into (9), we obtain:

$$w_{n+1} = w_n + \frac{m_n^0 u_n}{\|u_n\|2}(x^{n-D} - u_n^H w_n) + \frac{m_n^1 u_{n-1}}{\|u_{n-1}\|^2}\left(x^{n-D-1} - u_{n-1}^H w_n - m_0 u_{n-1}^H u_n\right)$$

$$+\frac{m_n^M u_{n-M}}{\|u_{n-M}\|^2}\begin{bmatrix} x^{n-D-M} - u_{n-M}^H w_n - m_0 u_{n-M}^H u_n - \\ \ldots m_{M-1} u_{n-M}^H u_{n-M+1} \end{bmatrix} \quad (10)$$

when $u_n = x_n + \varepsilon_n$ and these two input signals-x_n and ε_n-are assumed to be complex random processes that are zero-mean, wide-sense-stationary, mean-ergodic, and proper. And they are mutually independent, we have:

$$E(m_a u_{n-b}^H u_{n-a}) = 0, a = 0,1,\ldots, \quad M-1, b = 1,2,\ldots, M, a^1 b \quad (11)$$

where, E(.) is the expectation. Based on (11), (10) can be proximate to write as:

$$w_{n+1} = w_n + \frac{m_n^0 u_n}{\|u_n\|^2}(x^{n-D} - u_n^H w_n) + \frac{m_n^1 u_{n-1}}{\|u_{n-1}\|^2}(x^{n-D-1} - u_{n-1}^H w_n) + \ldots + \frac{m_n^M u_{n-M}}{\|u_{n-M}\|^2}(x^{n-D-M} - u_{n-1}^H w_n) \quad (12)$$

The formulation in (12) gives us alternative view to analyze the NLMS-OCF algorithm. In this formulation, the estimated weights of the NLMS-OCF algorithm shows more details in the internal structure and becomes very tractable to analyze.

NLMS-OCF-AG algorithm for adaptive transversal equalizer: The purpose of adaptive scheme suggested in reference (Haykin, 2002) is to find an estimate for the particular value of the step-size parameter that minimizes the ensemble-average cost function:

$$J_n^j = \frac{1}{2}E\left[\left|e_n^j\right|^2\right] 0 \in j \in M \quad (13)$$

Differentiating the cost function with respect to the step-size parameter m_n^j yields the scalar gradient:

$$\tilde{N}_n^j = \frac{J_n^j}{m_n^j} = \frac{1}{2}E\left[\frac{e_n^j}{m_n^j}e_n^{J*} + \frac{e_n^{J*}}{m_n^j}e_n^j\right] \quad (14)$$
$$0 \in j \in M$$

The recursion for updating parameter m_n^j is formulated as the following:

$$m_{n+1}^j = m_n^j - h^j \tilde{N}_n^j, 0 \in j \in M \quad (15)$$

where, h^j is a small, positive learning-rate parameter. And based on (15), the scalar gradient $\tilde{N}_n$ is defined as:

$$\tilde{N}_n^j = \frac{J_n^j}{m_n^j} = \frac{1}{2}\left[\frac{e_n^j}{m_n^j}e_n^{j*} + \frac{e_n^{j*}}{m_n^j}e_n^j\right] 0 \in j \in M \quad (16)$$

Differentiating the formulation (3) with respect to the step-size parameter m_n^j, yields:

$$\frac{e_n^j}{m_n^j} = -u_{n-j}^H Y_n^j, \ 0 \in j \in M \quad (17)$$

where the vector Y_n^j denotes the gradient of the weights w_n^j with respect to the step-size parameter m_n^j, that is:

$$\frac{w_n^j}{m_n^j} = Y_n^j, 0 \in j \in M \quad (18)$$

Differentiating (12) with respect to the step-size parameter m_n^j, we get the recursion for updating the estimate Y_n^j:

$$Y_{n+1}^j = Y_n^j + \frac{u_{n-j}}{\|u_{n-j}\|^2}(x^{n-D-j} - u_{n-j}^H w_n) - \left[a^\circ M_{i=0}\frac{m_n^i}{\|u_{n-i}\|2}u_{n-i}u_{n-1}^H\right]Y_n^j, \ 0 \in j \in M \quad (19)$$

Thus, (2), (3), (4), (5), (6) (17), (16), (15) and (19), in the specified order, constitute the NLMS-OCF-AG algorithm, which attempts to minimize the ensemble-average cost function.

COMPARISON WITH SIMULATION RESULTS

In this section, we compare the mean square error (MSE) learning curves from simulations between the NLMS-OCF and NLMS-OCF-AG algorithms. The initial estimates for the weights are zero. The parameter N is selected to be 32 and the delay Δ is chosen to be 16. Both the amplitudes of the real and imaginary parts of the input signals x_n are set to be one. The parameter hj 0∈j∈M is selected to be 0.01. The estimate for the error signal are defined as e_n^0.

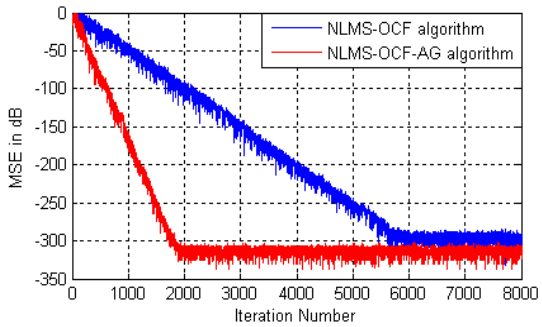

Fig. 2: Learning curves of NLMS-OCF and NLMS-OCF-AG algorithms without measurement noise

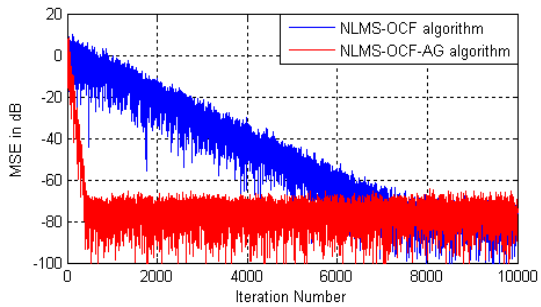

Fig. 3: Learning curves of NLMS-OCF and NLMS-OCF-AG algorithms with measurement noise

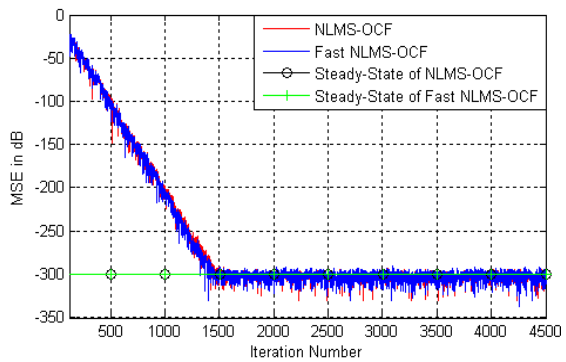

Fig. 4: Learning curves of NLMS-OCF and fast NLMS-OCF

- **Case 1:** The noise e_n is assumed to be absent. We use the number of the orthogonal correction factors M = 1 and the initial step-sizes are both selected to be equal 0.1. The MSE behavior predicted by the NLMS-OCF algorithm is shown in Fig. 2, together with the result predicted by the NLMS-OCF-AG algorithm. We observe that the convergence rate and the steady-state error of the NLMS-OCF-AG algorithm are much better than the conventional NLMS-OCF algorithm.
- **Case 2:** Both the amplitudes of the real and imaginary parts of the noise ε_n are assumed to 10^{-4}

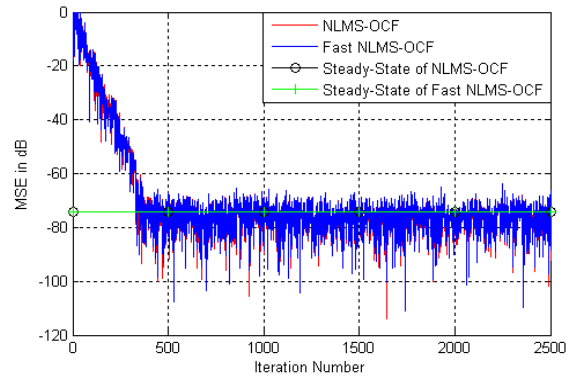

Fig. 5: Learning curves of NLMS-OCF and fast NLMS-OCF

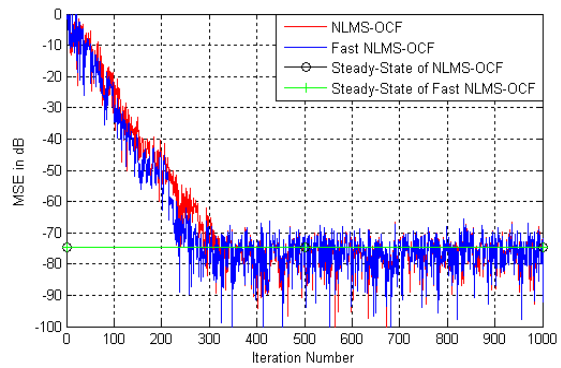

Fig. 6: Learning curves of NLMS-OCF and fast NLMS-OCF

be equal. We use the number of the orthogonal correction factors M = 3 and the initial step-size are set to be equal 0.01. The MSE behavior predicted by the NLMS-OCF and NLMS-OCF-AG algorithms are shown in Fig. 3. It can be concluded that the NLMS-OCF-AG algorithm has a fast convergence rate compared with the NLMS-OCF algorithm.

- **Case 3:** The noise ε_n is assumed to be absent. We use the number of the orthogonal correction factors M = 8 and the step-size . The steady-state μ = 0.3 simulations are given by averaging steady-state iterations from 2000 to 5000. The MSE behavior predicted by the NLMS-OCF is shown in Fig. 4, together with the result predicted by the fast NLMS-OCF. We observe that the predicted MSE results by the two algorithms are much closer each other.
- **Case 4:** Both the amplitudes of the real and imaginaryparts of the noise ε_n are assumed to be equal 10^{-4}. We use the number of the orthogonal correction factors M = 8 and the step-size μ = 0.3, which is the same as case 3. The steady-state simulations are given by averaging steady-state iterations from 1000 to 4000. The MSE behavior predicted by the NLMS-OCF and fast NLMS-OCF are shown in Fig. 5. It can be concluded that the fast

NLMS-OCF reduces computational complexity without any degradation in its convergence characteristic compared with the NLMS-OCF.

- **Case 5:** We set both the amplitudes of the real and imaginary parts of the noise ε_n to be equal 10^{-4}. The number of the orthogonal correction factors is set to be 28 and the step-size μ is chosen to be 0.1. The steady-state simulations are given by averaging steady-state M iterations from 500 to 3500. The MSE behavior predicted by the NLMS-OCF and fast NLMS-OCF are given in Fig. 6. It can be concluded that the predicted steady-state MSE results by the two algorithms are much closer each other, but the convergence rate of the fast NLMS-OCF is slightly better over the NLMS-OCF. We think the reason is that the iterated direction of the NLMS-OCF algorithm is u^k_n, which is different from the direction u_{n-k} that causes the estimation error signal. However, the iterated direction of the fast version of the NLMS-OCF is u_{n-k}, which direction also causes the estimation error signal.

CONCLUSION

Under the assumption that the input signals are the complex random processes that are zero-mean, wide-sense-stationary, mean-ergodic, and proper, the NLMS-OCF-AG algorithm is presented to find an estimate for the particular value of the step-size parameter that minimizes the ensemble-average cost function. The proposed algorithm carries out the update step-size parameter by calculating the gradient of the NLMS-OCF algorithm estimated output-error and the weights with respect to the step-size parameter. And the NLMS-OCF-AG algorithm allows for flexibility in the choice of the input vectors used for adaptation. The simulation results show that the NLMS-OCF-AG algorithm improves the convergence performance with a fast speed compared with the NLMS-OCF algorithm. In additional, the NLMS-OCF-AG algorithm has a small steady-state error.

ACKNOWLEDGMENT

This study is supported by foundation of Wenzhou science and technology bureau (G20090104). The authors are grateful for the anonymous reviewers who made constructive comments.

REFERENCES

Fan, Y. and J. Zhang, 2009. Variable step-size affine projection algorithm with exponential smoothing factors. Electr. Lett., 45(17): 911-913.

Gonzalez-Rodriguez, I., J.J. Palacios and C.R. Vela, 2010. Heuristic local search for fuzzy open shop scheduling. 2010 IEEE International Conference on Fuzzy Systems, pp: 1-8.

Haykin, S., 2002. Adaptive Filter Theory, 4th Edn., Prentice-Hall, New Jersey.

Ikuma, T., A.A. Beex and J.R. Zeidler, 2008. Non-wiener mean weight behavior of LMS transversal equalizers with sinusoidal interference. IEEE T. Signal Proces., 56(9): 4521-4525.

Lee, J., Y.C. Park and D.H. Youn, 2008. Robust pseudo affine projection algorithm with variable step-size. Electr. Lett., 44(3): 250-251.

Ozeki, K. and T. Umeda, 1984. An adaptive filtering algorithm using an orthogonal projection to an affine subspace and its properties. Electro. Commun. Japan, 67(5): 190-27.

Paleologu, C., J. Benesty and S. Ciochina, 2008. A variable step-size affine projection algorithm designed for acoustic echo cancellation. IEEE T. Audio Speech Language Proc., 16(8): 1466-1478.

Rupp, M., 1998. A family of adaptive filter algorithms with decorrelating properties. IEEE T. Signal Process., 46(3): 771-775.

Sankaran, S.G. and A.A. Beex, 2000. Fast generalized affine projection algorithm. Inter. J. Adap. Control, 14(6): 623-641.