Research Journal of Applied Sciences, Engineering and Technology 3(12): 1391-1395, 2011
ISSN: 2040-7467

Submitted: July 22, 2011 Accepted: September 18, 2011 Published: December 26, 2011

Two-area Load Frequency Control using IP Controller Tuned Based on Harmony Search

Sayed Mojtaba Shirvani Boroujeni, Babak Keyvani Boroujeni,
Mostafa Abdollahi and Hamideh Delafkar
Department of Electrical Engineering, Boroujen Branch, Islamic Azad University, Boroujen, Iran

Abstract: In this study an optimal load frequency controller for two area interconnected power system is presented to quench the deviations in frequency and tie line power due to different load disturbances. In classical LFC problems, PI type controllers are used to control of system. But due to some disadvantages of the PI type controllers, the researchers are toward finding a better control scheme. Although many different advanced method have been carried out to LFC problem, but the industries are willing to use simple PI controllers. In this scope, this paper presents IP type controller for LFC problem. The parameters of the proposed IP controller are tuned using Harmony Search (HS) method. A two-area electric power system with a wide range of parametric uncertainties is given to illustrate the proposed method. To show effectiveness of the proposed method and also comparison purposes, a PI type controller optimized by HS is also designed. The simulation results visibly show the validity of IP controller in comparison with PI controller.

Key words: Harmony search, IP controller, load frequency control, two area electric power system

INTRODUCTION

For large scale electric power systems with interconnected areas, Load Frequency Control (LFC) is important to keep the system frequency and the inter-area tie power as near to the scheduled values as possible. The input mechanical power to the generators is used to control the frequency of output electrical power and to maintain the power exchange between the areas as scheduled. A well designed and operated power system must cope with changes in the load and with system disturbances, and it should provide acceptable high level of power quality while maintaining both voltage and frequency within tolerable limits.

Many control strategies for Load Frequency Control in electric power systems have been proposed by researchers over the past decades. This extensive research is due to fact that LFC constitutes an important function of power system operation where the main objective is to regulate the output power of each generator at prescribed levels while keeping the frequency fluctuations within pre-specifies limits. A unified tuning of PID load frequency controller for power systems via internal mode control has been proposed by Tan (2010). In this study the tuning method is based on the Two-Degree-of-Freedom (TDF) Internal Model Control (IMC) design method and a PID approximation procedure. A new discrete-time sliding mode controller for load-frequency control in areas control of a power system has been presented by Vrdoljak *et al*. (2010). In this study full-state feedback is applied for LFC not only in control areas with thermal power plants but also in control areas with hydro power plants, in spite of their non minimum phase behaviors. To enable full-state feedback, a state estimation method based on fast sampling of measured output variables has been applied.The applications of artificial neural network, genetic algorithms and optimal control to LFC have been reported by Kocaarslan and Cam (2005); Rerkpreedapong *et al*. (2003) and Liu *et al*. (2003). An adaptive decentralized load frequency control of multi-area power systems has been presented by Zribi *et al*. (2005). Also the application of robust control methods for load frequency control problem has been presented by Shayeghi *et al*. (2007) and Taher and Hematti (2008).

This study deals with a design method for LFC in a multi area electric power system using IP type controller whose parameters are tuned using HS. In order to show effectiveness of the proposed method, this IP controller is compared with a PI type controller whose parameters are tuned using HS. Simulation results show that the IP controller guarantees robust performance under a wide range of operating conditions and system uncertainties.

PLANT MODEL

Figure 1 shows a two-control area power system which is considered as a test system. The state-space model of the system is as (1) (Wood and Wollenberg, 2003).

Corresponding Author: Sayed Mojtaba Shirvani Boroujeni, Department of Electrical Engineering, Boroujen Branch, Islamic Azad University, Boroujen

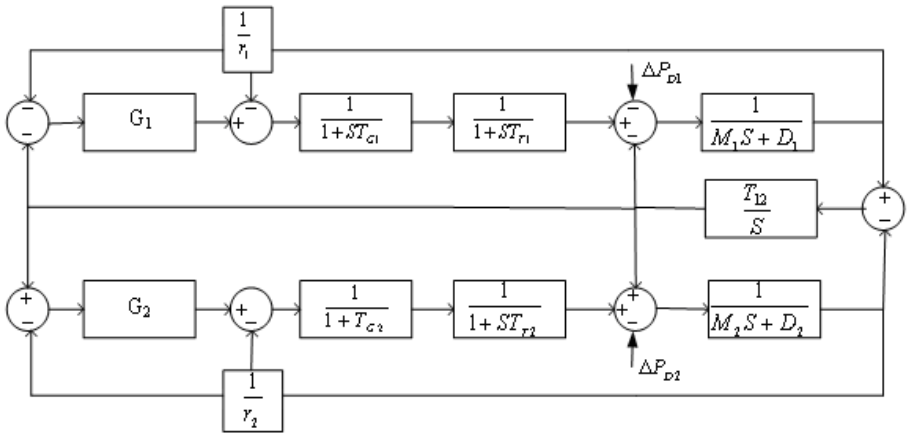

Fig. 1: Two-area electric power system for LFC studies

$$\begin{cases} \dot{x} = Ax + Bu \\ y = Cx \end{cases} \quad (1)$$

where,

$$u = [\Delta P_{D1}, \Delta P_{D2}, U_1, U_2]$$
$$y = [y_1, y_2] = [\Delta f_1, \Delta f_2, \Delta P_{tie}]$$
$$x = [\Delta P_{G1} \quad \Delta P_{T1} \quad \Delta f_1 \quad \Delta P_{tie} \quad \Delta P_{G2} \quad \Delta P_{T2} \quad \Delta f_2]$$

$$A = \begin{bmatrix} \frac{-1}{T_{G1}} & 0 & \frac{-1}{r_1 T_{G1}} & 0 & 0 & 0 & 0 \\ \frac{1}{T_{T1}} & \frac{-1}{T_{T1}} & 0 & 0 & 0 & 0 & 0 \\ 0 & \frac{1}{M_1} & \frac{-D_1}{M_1} & \frac{-1}{M_1} & 0 & 0 & 0 \\ 0 & 0 & T_{12} & 0 & 0 & 0 & -T_{12} \\ 0 & 0 & 0 & 0 & \frac{-1}{T_{G2}} & 0 & \frac{-1}{r_2 T_{G2}} \\ 0 & 0 & 0 & 0 & \frac{1}{T_{T2}} & \frac{-1}{T_{T2}} & \\ 0 & 0 & 0 & \frac{1}{M_2} & 0 & \frac{1}{M_2} & \frac{-D_2}{M_2} \end{bmatrix}$$

$$B = \begin{bmatrix} 0 & 0 & \frac{1}{M_1} & 0 & 0 & 0 & 0 \\ 0 & 0 & 0 & 0 & 0 & 0 & \frac{1}{M_2} \\ \frac{1}{T_{G1}} & 0 & 0 & 0 & 0 & 0 & 0 \\ 0 & 0 & 0 & 0 & \frac{1}{T_{G2}} & 0 & 0 \end{bmatrix}$$

The parameters of model, defined as follow:

Δ	: Deviation from nominal value
M= 2H	: Constant of inertia
D	: Damping constant
R	: Gain of speed droop feedback loop
T_t	: Turbine Time constant
T_G	: Governor Time constant
G_1	: First area controller
G_2	: Second area controller

The typical values of system parameters for nominal operation condition are as follow:

$$T_{T1} = T_{T2} = 0.03 \qquad T_{G1} = T_{G2} = 0.08$$
$$T_{P1} = T_{P2} = 20 \qquad R_1 = R_2 = 2.4$$
$$K_{P1} = K_{P2} = 120 \qquad B_1 = B_2 = 0.425$$
$$K_1 = K_2 = 1; a_{12} = -1 \quad T_{12} = 0.545$$

where, the footnote 1 indicates first area parameters and footnote 2 indicates second area parameters and the parameters of two areas are considered equal.

The objectives are Design G_1 and G_2 in Load Frequency Control (LFC). As referred before, many methods have been carried out to design these controllers so far. In this study IP type controller is considered to

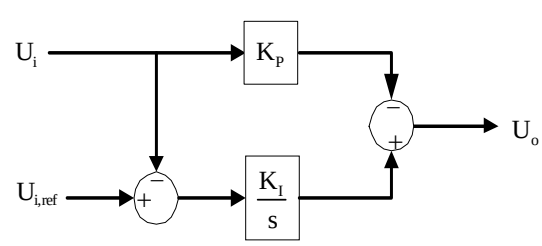

Fig. 2: Structure of the IP controller

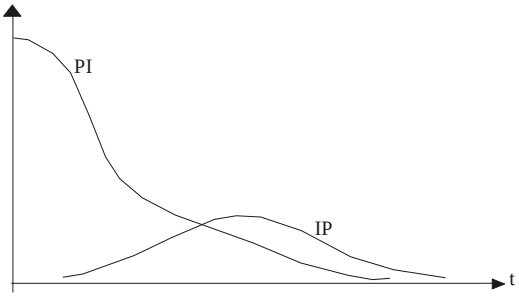

Fig. 3: Output of IP and PI regulators with the same damping coefficient () and the same band width at the same step input signal command

control of system. A Meta heuristic optimization method named HS is used to tuning the proposed controllers. The goals are study the ability of IP controller in Load Frequency Control (LFC) problem and also comparing the performances of IP and PI controllers. In the next section, the proposed IP controller is developed.

IP controller: As referred before, in this paper IP type controllers are considered for LFC problem. Fig. 2 shows the structure of IP controller. It has some clear differences with PI controller. In the case of IP regulator, at the step input, the output of the regulator varies slowly and its magnitude is smaller than the magnitude of PI regulator at the same step input (Sul, 2011). Also as shown in Fig. 3, If the outputs of the both regulators are limited as the same value by physical constraints, then compared to the bandwidth of PI regulator the bandwidth of IP regulator can be extended without the saturation of the regulator output (Sul, 2011).

Design methodology: The proposed IP controller performance is evaluated on the proposed test system given in section 2. The parameters of the IP controllers are obtained using HS. In the next subsection a brief introduction about HS is presented.

Harmony search algorithm: Harmony Search (HS) algorithm is based on natural musical performance processes that occur when a musician searches for a better state of harmony, such as during jazz improvisation. The engineers seek for a global solution as determined by an objective function, just like the musicians seek to find musically pleasing harmony as determined by an aesthetic (Hong-qi *et al*., 2008). In music improvisation, each player sounds any pitch within the possible range, together making one harmony vector. If all the pitches make a good solution, that experience is stored in each variable's memory, and the possibility to make a good solution is also increased next time. HS algorithm includes a number of optimization operators, such as the Harmony Memory (HM), the harmony memory size (HMS, number of solution vectors in harmony memory), the Harmony Memory Considering Rate (HMCR), and the Pitch Adjusting Rate (PAR). In the HS algorithm, the harmony memory (HM) stores the feasible vectors, which are all in the feasible space. The harmony memory size determines how many vectors it stores. A new vector is generated by selecting the components of different vectors randomly in the harmony memory. For example, Consider a jazz trio composed of saxophone, double bass and guitar. There exist certain amount of preferable pitches in each musician's memory: saxophonist, {Do, Mi, Sol}; double bassist, {Si, Sol, Re}; and guitarist, {La, Fa, Do}. If saxophonist randomly plays {Sol} out of {Do, Mi, Sol}, double bassist {Si} out of {Si, Sol, Re}, and guitarist {Do} out of {La, Fa, Do}, that harmony (Sol, Si, Do) makes another harmony (musically C-7 chord). And if the new harmony is better than existing worst harmony in the HM, the new harmony is included in the HM and the worst harmony is excluded from the HM. This procedure is repeated until fantastic harmony is found. When a musician improvises one pitch, usually he (or she) follows any one of three rules:

- playing any one pitch from his (or her) memory
- playing an adjacent pitch of one pitch from his (or her) memory
- playing totally random pitch from the possible sound range (Hong-qi *et al*., 2008).

Similarly, when each decision variable chooses one value in the HS algorithm, it follows any one of three rules:

- choosing any one value from HS memory (defined as memory considerations)
- choosing an adjacent value of one value from the HS memory (defined as pitch adjustments)
- choosing totally random value from the possible value range (defined as randomization)

The three rules in HS algorithm are effectively directed using two parameters, i.e., Harmony Memory Considering Rate (HMCR) and Pitch Adjusting Rate (PAR). The steps in the procedure of harmony search are as follows (Verma *et al*., 2010):

Step 1: Initialize the problem and algorithm parameters.
Step 2: Initialize the Harmony Memory (HM)
Step 3: Improvise a new harmony from the HM
Step 4: Update the HM
Step 5: Repeat Steps 3 and 4 until the termination criterion is satisfied

IP controller adjustment using HS: In this section the parameters of the proposed IP controllers are tuned using HS. In optimization methods, the first step is to define a performance index for optimal search. In this study the

Table 1: Optimum values of K_p and K_I for IP controllers

	K_P	K_I
First area IP parameters	3.3750	7.7005
Second area IP parameters	1.6605	7.4918

Table 2: Optimum values of K_p and K_I for PI controllers

	K_P	K_I
First area PI parameters	1.8674	5.2070
Second area PI parameters	3.1846	4.2829

Table 3: 10% step increase in demand of first area (P_{D1})

	The calculated ITAE	
	IP	PI
Nominal operating condition	0.0266	0.0362
Heavy operating condition	0.0305	0.0383
Very heavy operating condition	0.0567	0.0744

performance index is considered as (2). In fact, the performance index is the Integral of the Time multiplied Absolute value of the Error (ITAE).

$$ITAE = \int_0^t t\left|\Delta\omega_1\right|dt + \int_0^t t\left|\Delta\omega_2\right|dt \qquad (2)$$

It is clear to understand that the controller with lower ITAE is better than the other controllers. To compute the optimum parameter values, a 10% step change in DP_{D1} is assumed and the performance index is minimized using HS. It should be noted that HS algorithm is run several times and then optimal set of parameters is selected. The optimum values of the IP parameters are obtained using HS and summarized in the Table 1.

In order to comparison and show effectiveness of the proposed method, PI type controller optimized by HS is incorporated for LFC. The optimum value of the PI controllers Parameters are obtained and summarized in the Table 2.

RESULTS AND DISCUSSION

The results are carried out on the multi area test system with the proposed IP and PI controllers. Three operating conditions are considered for simulation as follows:

- Nominal operating condition
- Heavy operating condition (20%changing parameters from their typical values)
- Very heavy operating condition (40% changing parameters from their typical values)

In order to demonstrate the robustness of the proposed method, The ITAE is calculated following step change in the demand of first area (ΔP_{D1}) at all operating conditions (Nominal, Heavy and Very heavy) and results are listed at Table 3. Following step change, the IP controller has better performance than the PI controller at all operating conditions.

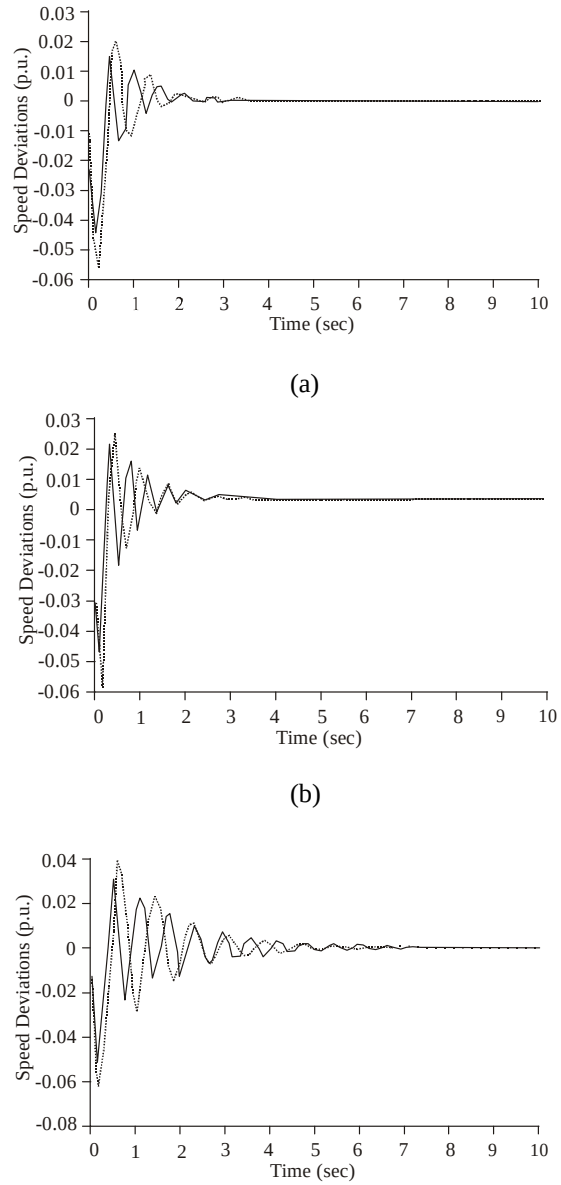

Fig. 4: Dynamic response $\Delta\omega_1$ following step change in demand of first area (ΔP_{D1}); a: Nominal b: Heavy c: Very heavy; Solid (IP controller), Dashed (PI controller)

Fig. 4 shows $\Delta\ \omega_1$ at nominal, heavy and very heavy operating conditions following 10 % step change in the demand of first area (ΔP_{D1}). Each figure contains two plots as solid line for IP controller and dashed line for PI controller. It is seen that the IP controller has better performance than the other method at all operating conditions.

CONCLUSION

This paper presented the application of a new control scheme for LFC problem. IP type controller has been successfully carried out for LFC problem. The parameters of the proposed IP controller have been tuned by using HS. The proposed IP controller had significant priority rather than PI controller. The simulation results which have been carried out on a two-area electric power system showed the viability of IP controller. The PI controller is the most commonly used controller in the industry and practical systems, therefore the paper's results can be used for the practical LFC systems.

REFERENCES

Hong-qi, L., K.Tai-hoon and X. Shao-Long ,2008. An improved PSO-based of heamony search for complicated optimization problems. Intl. J. Hybrid Inform. Technol., 1(1): 57-64.

Kocaarslan, I. and E. Cam, 2005. Fuzzy logic controller in interconnected electrical power Systems for load-frequency control. Electr. Power Energ. Syst., 27: 542-549.

Liu, F., Y.H. Song, J. Ma, S. Mai, Q. Lu, 2003. Optimal load frequency control in restructured power systems. IEE Proc. Gen. Trans. Distr. 150(1): 87-95.

Rerkpreedapong, D., A. Hasanovic and A. Feliachi, 2003. Robust load frequency control using genetic algorithms and linear mmatrix inequalities. IEEE T. Power Syst., 18(2): 855-861.

Shayeghi, H., H.A. Shayanfar and O.P. Malik, 2007. Robust decentralized neural networks based LFC in a deregulated power system. Electric. Power Sys. Res., 77: 241-251.

Sul, S.K., 2011. Control of Electric Machine Drive Systems, John Wiley & Sons, Inc., Hoboken, New Jersey.

Tan, W., 2010. Unified tuning of PID load frequency controller for power systems via IMC. IEEE T. Power Syst., 25(1): 341-350.

Taher, S.A. and R. Hematti, 2008. Robust decentralized load frequency control using multi variable QFT method in deregulated power systems. Am. J. Appl. Sci., 5(7): 818-828.

Verma, A., B.K. Panigrahi and P.R. Bijwe, 2010. Harmony search algorithm for transmission network expansion planning. IET Gen. T. Dist., 4(6): 663-673.

Vrdoljak, K., N. Peric and I. Petrovic, 2010. Sliding mode based load-frequency control in power systems. Electric. Power Sys. Res., 80(5): 514-527.

Wood, A.J. and B.F. Wollenberg, 2003. Power Generation, Operation and Control. John Wiley & Sons.

Zribi, M., M. Al-Rashed and M. Alrifai, 2005. Adaptive decentralized load frequency control of multi-area power systems. Electric. Power Energ. Syst., 27: 575-583.