Research Journal of Applied Sciences, Engineering and Technology 3(3): 159-171, 2011
ISSN: 2040-7467

Received: September 15, 2010 Accepted: February 22, 2011 Published: March 30, 2011

Design and Construction of a Mechanized Loom

A.S. Akinwonmi
Department of Mechanical Engineering, Faculty of Engineering,
University of Mines and Technology, Tarkwa, Ghana

Abstract: This study analyzes the design and construction of a Mechanized Loom to improve the existing Hand Loom used by the local weavers and to weave a 300 mm width *Aso-Oke* instead of the existing 100 mm width. There are difficulties in weaving of *Aso-Oke* using the Foot Loom and Hand Loom since this conventional method is time consuming and labour intensive. In the Mechanized Loom, the mode of operation of the Hand and Foot Loom was studied and then mechanized with the application of Cam mechanism and spring to throw the Shuttle from one shuttle arm through the harness to the other shuttle arm. In the design, the warp is separated to form the shed through which the shuttle passes from one shuttle arm to the other shuttle arm with the aid of the harness and its linkage. The construction was done using mild steel and hard wood for the cams. The advantages and importance of this Mechanized Loom include high efficiency, increased production, easier operation, cheap and available material, portability, durability, reliable accuracy and reasonable speed.

Key words: *Aso-Oke*, cams, construction, design, harness, local weavers, mechanized loom, shuttle, warp

INTRODUCTION

Hand weaving is one of the oldest and most common ways of making cloth. In Nigeria it is still very common especially in rural areas. Weaving involves the use of any type of yarn on a loom. The first step is to roll the spun yarn into bundles of threads on spindles or pools followed by the preparation of long warp threads on the ground from the rolled bundles of yarns or pools. This yarns form a shed through which the shuttle can be inserted. The shuttle carries the filling or the weft yarn through the shed. A reed or batten beats the filling yarn back into the cloth to make the weave firm. The reed is a set of wires in a frame and used for beating the filling yarn into place. Loom is used for weaving which is widely applied in textiles art which includes netting, wattling, basketry, the spinning of the yarn and the weaving of the cloth (Babara, 2008). The technical name for cloth is textile, the word originates from the Latin word *textere* which simply means "to weave" (Tortora, 1987). Weaving is an interlacing of one series of threads, the warp are right angle with another series of thread the weft (Hollen *et al*., 1988). The warp always runs longitudinally to the cloth beam apron while the weft runs at right angles to the warp (Robert *et al*., 1996). The weft always runs under one thread of the warp and over one or more depending on the kind of weaver and always crosses from one selvage to the other. The major components of the loom are the warp beam, heddles harnesses, shuttle reed and take up roll. In the loom, yarn processing includes shedding, picking, battening and taking-up operations (Collier *et al*., 2001). These motions are difficult to make accurately in the foot loom and hand loom that the local weavers use especially in the south western part of Nigeria. The hand looms and the foot looms are manually operated and this is too labourious and of low productivity with little or no accuracy. Weaving with a loom has been developed, probably at more than one place and time in human history from a single mat and basket weaving without a loom, laborious process by comparison (Kadolph, 2007). The modern weaver uses the same basic principles that the primitive weaver did, but numerous inventions have changed the slow laborious hand weaving process into a highly productive mechanized industry. A mechanized loom is therefore needed because of the following advantages over the existing foot and hand looms, fast weaving, simple structure, high productivity, easier operation, less human energy and greater accuracy. The engineer, with his main interest in design and manufacture, must have some knowledge of the structure of metals, (Johnson and Mellor, 1973) therefore, mild steel is used as the metallic material for the construction.

The aim of this research is to design and construct a mechanized loom at low cost to weave a 300 mm wide *Aso-Oke* of better and improved quality instead of the existing 100 mm wide *Aso-Oke* and to improve on the existing hand loom used by the local weavers which is time wasting and energy consuming. The mechanized loom has been designed and constructed and tested to confirm the working principle of the loom.

History of "*Aso-Oke*" in Yoruba land: The *Yorubas* have mainly urban people for centuries, living in large towns administrated by a king (the Oba) and his court.

Each town has a market and support craft associations including the weavers. Oje market in the Yoruba city of the Ibadan is famous for its cloth "fairs" and attracts cloth traders from all over West Africa.

Aso-Oke (literally "Top Cloth") is worn by Yoruba men and women throughout south-western part of Nigeria on special occasions like weddings, naming ceremonies and religious festivals. Women wear the cloth in the form of wrap around skirt called "*Iro*", a head tie "*Gele*" and "*Iborun*", a strip of cloth like the "*Gele*" worn over the shoulder or tied around the waist. Men wear suits on *Aso-Oke* cloth consisting of a large gown "*Agbada*" and trousers "*Sokoto*".

Aso-Oke is hand woven by men on the Yoruba version of the West African double heddle narrow loom. To make one *Aso-Oke*, the weaver weaves a 40-foot strip of cloth. This is given to a tailor who cuts it to equal length pieces and sows it together to make a full cloth. Some woven designs on the cloth show wooden writing boards used especially by the Hausa of Northern part of Nigeria to practice writing verses from the Quran in fact theses designs are said to have a Hausa origin. The Hausa are one of the largest and most widespread of African, people with trading and craft producing communities settled in towns and cities throughout much of West Africa. It was also Hausa traders who would have provided the magenta coloured silk that one sees in this *Aso-Oke*. Magenta coloured waste silk from Tunisian, Italian and French looms was one of the products transported across the Sahara from Tunisia and Libya to the Hausa city of Kano in the 19th century.

Imported silk waste was spun and woven in the same way as wild silk and the locally grown cotton and it added to the prestige and the expense of the complete *Aso-Oke*. Locally spun and dyed indigo cotton thread was also expensive as it was sometimes dyed up to fourteen times in order to get the desired deep blue colour. Today the expensive silk and indigo threads are often replaced by shiny metallic lurex from Japan and brightly coloured rayon threads.

The Yoruba are by far the best known and largest group of male weavers in Nigeria. Yoruba *Aso-Oke* is still worn for ceremonial occasions such as wedding and naming ceremonies throughout south west Nigeria. Today the subdued palette of the 1970s cloth has been displayed by spiny metallic lurex and brightly coloured rayon threads. In the north, Hausa men wove a diverse range of cloths including gauzy indigo turban fabrics in strips less than ½ wide, thick cotton *Luru* blankets in 8 inch bands, and inch bands , and cotton wrapper cloths with strip width over 15 inches. There are also other much less than well known forms of double heddle narrow strip loom weaving across the huge expanse of the country known to Nigerians as the "Meddle Belt". Among the groups in this area that are or were active weavers are the *Nup*, *Turi*, *Twi*, *Jukun* and *Gwari*.(Fig. 1).

All these cloths are genuine handmade pieces woven and collected in Nigeria. Most are old cloths, dating from between 1930s and 1960s.

Other Nigerian men's weaving- The highlight this time is an extremely rare 19th century *Nupe* silk cloth and across river leopard society cloth.

Sanyan-Yoruba wild silk and cotton mix *Aso-Oke* subtle variations in natural colour and irregularities of texture makes the finest old *Sanyan* cloth among the most beautiful of the Nigerian textiles. A Yoruba saying recalls that "*sanyaa ni baba aso*", "*Sanyan* is the father of cloths" a non lustrous beige wild silk obtained from cocoons of the *anaphe infracta* moth was the most prestigious of the Yoruba "big" cloths. The first two cloths shown below are the rare pieces using genuine wild silk in subtle blends with white cotton. Beige cotton was often substituted and most so-called *sanyan* cloths are in fact cotton, though still very attractive.

Principle of operation of mechanized loom: There are basically four types of motions in the Loom to facilitate its successful operation. The motions are:

- The alternate raising and lowering of the warp yarns by the harness in order to allow the shuttle to run between them to lay a pick of weft across the full width o the Loom.
- Throwing of the shuttle from one side of the shuttle arm to the other shuttle arm.
- Pressing or compressing the filling yarns of the weft light into fabric by the reed or beater.
- Winding up of the completed cloth as it is woven.

The Mechanized Loom is powered by an electric motor connected through a pulley to the cam shaft which carries the 3 disc cams. A metal disc mounted on this camshaft carries the harness linkage connected by bolt and nut in a slot on the disc. As the metal disc rotates, the two harnesses are raised or lifted up thereby open alternately to create an entrance or passage for the shuttle.

The shuttle arm which is connected to the frame by a spring has a follower resting on the cam. As the cam rotates, the lift raises and pushes the shuttle arm backwards and the fall of the follower throws the shuttle through the opened harness to the other shuttle arm which lays the weft across the warp. The beater also attached to the frame has its follower resting on the third cam. As the cam rotates, the lift of the cam pushes the beater forward and the fall allows the beater to move backward through a force supplied by the compressive spring. This action compresses the laid weft across the warp. The cloth beam whose pulley is connected to the second pulley on the

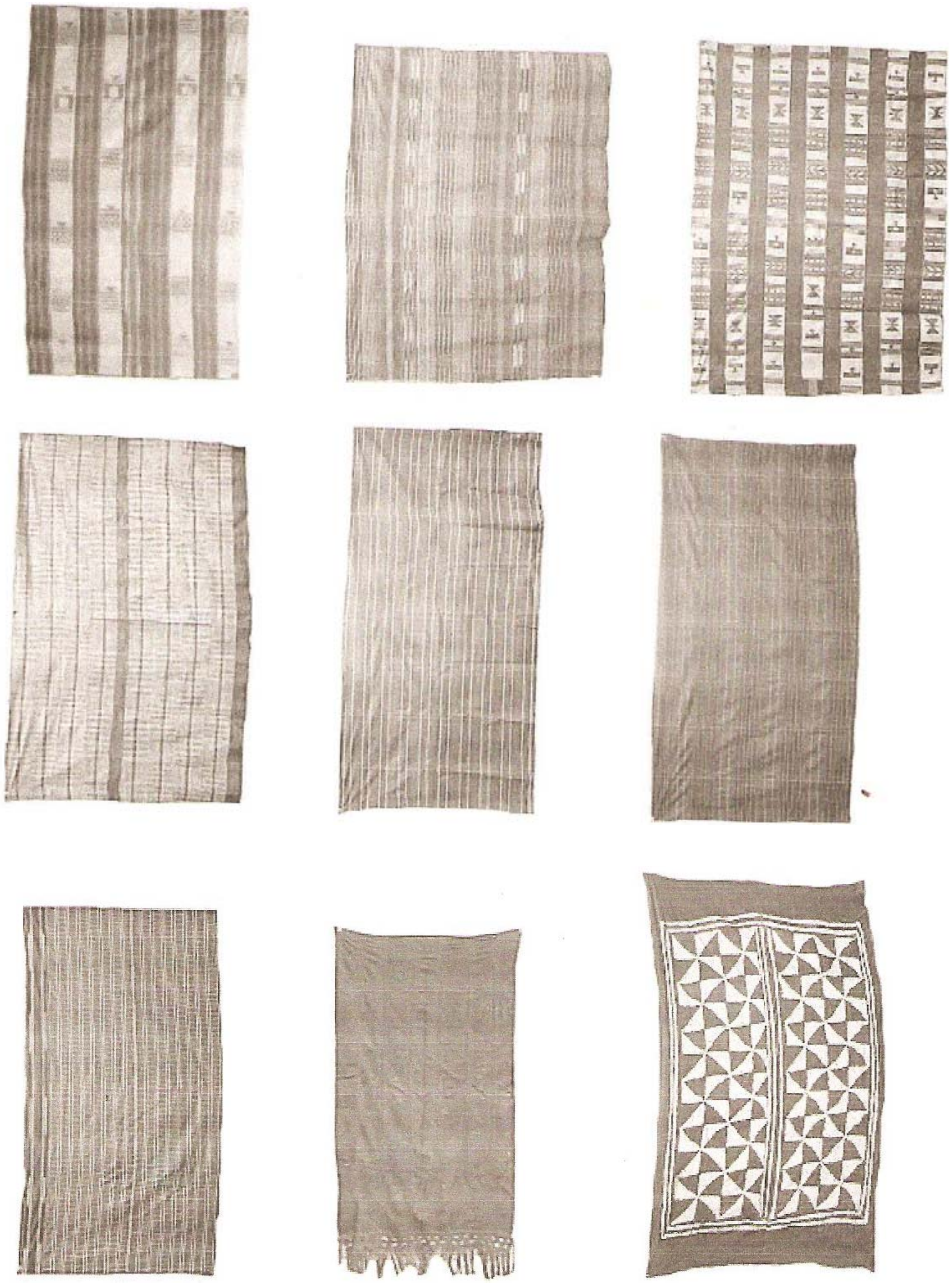

Fig. 1: Samples of Yoruba *Aso-Oke*

camshaft rotates and folds the woven 300mm wide *Aso-Oke*

MATERIALS AND METHODS

The design was carried out by first visiting the local weavers at Ilorin, Kwara State of Nigeria using the Foot Loom and Hand Loom to weave, the various motions performed by the Loom were identified and studied. These motions were mechanized using cam mechanism made of hard wood (Fig. 2, 3), then the construction was carried out at the Mechanical Engineering workshop of the University of Ibadan, Nigeria in 2005.

Design analysis with mathematical analysis:
Selection of pulley and its diameter:
The formula below is used to determine the transmitted speed.

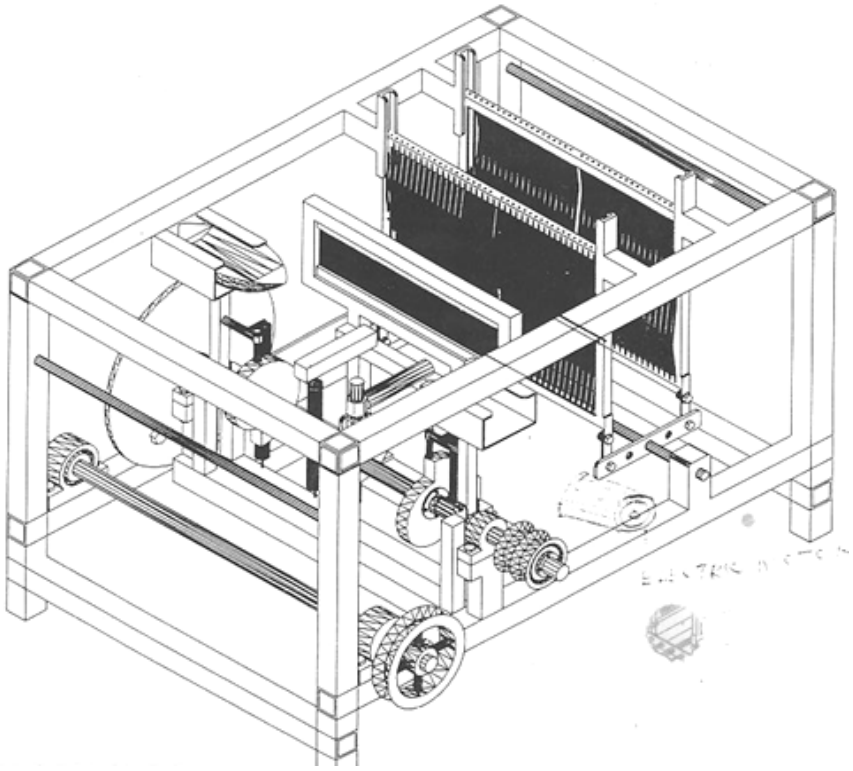

Fig. 2: Designed mechanized loom

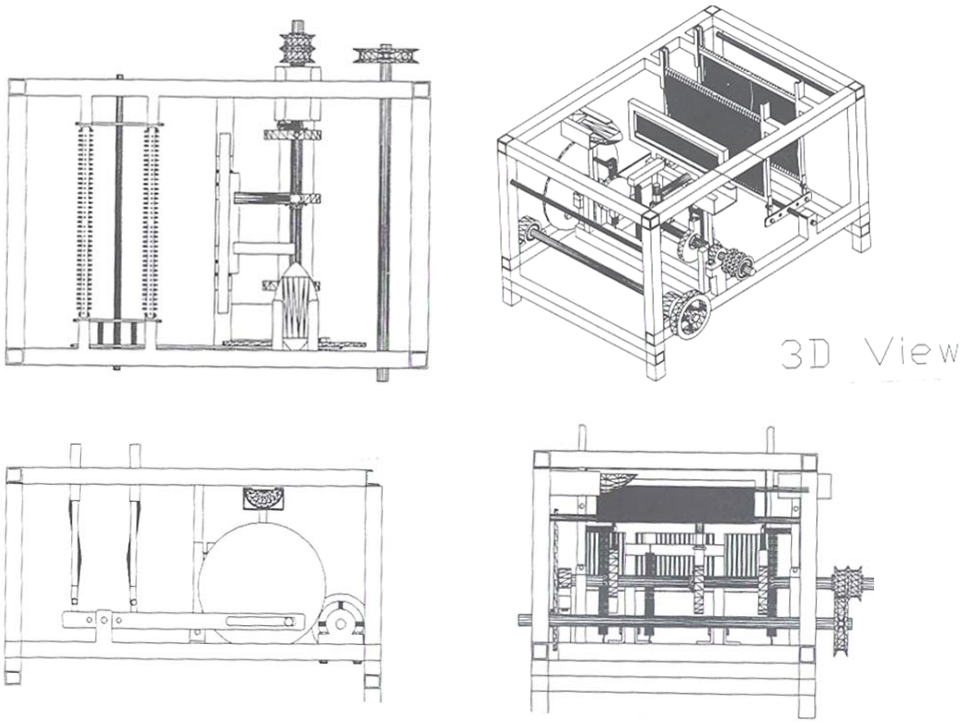

Fig. 3: Orthographic projection of the designed mechanized loom

$$\frac{\text{Speed of Driven}}{\text{Speed of Driver}} = \frac{\text{Diameter of Driver}}{\text{Diameter of Driven}}$$

$n_1 / n_2 = D_2 / D_1$

$n_1 \text{ X } D_1 = n_2 \text{ X } D_2$

$n_2 = n_1 \text{ X } D_1 / D_2$

$$n_2 = \frac{1440 \text{ X } 100}{150}$$

where,

n_1 = Speed of the Driver pulley = 1440 rpm
n_2 = Speed of the Driven pulley = ?
D_1 = Diameter of Driver pulley = 100 mm
D_2 = Diameter of Driven pulley = 150 mm

Determination of centre distance (C): The Centre distance (C) between the two adjacent pulleys is determined using this formula,

$$C = (D_1 + D_2)/2 + D_1$$

$$\frac{100 + 150}{2} + 100 = 225 \text{ mm}$$

Power required to drive the machine:

$$P = T_{AV}\omega$$

where, T_{AV} = Average or mean torque
ω = Angular Velocity of the Shaft = $\frac{2\pi N}{60}$

Procedure to get the average Torque:

- The Average Torque that will drive the 3 cams was calculated.
- The Average Torque that will drive the metal disc carrying the harness too was calculated.
- Then the two average torques added together.

Average torque for the 3 cams:
Calculation,
Pre-tensioned Force from the spring (F)
F = Ke
K= Force constant of the Spring = 856.43Nm^{-1}

e = Extension on the spring when loaded = $(l_1 - l_2)$

where,
l_1 = Initial length of the spring = 0.13 mm
l_2 = Length of spring as it presses the follower against the Cam when the Cam is stationary = 0.225 m

Extension (e) = (0.225-0.130) m
e = 0.095 m
From, F = Ke
F = 856.430N/m x 0.095 m
F = 81.360 N

This is the pre-tensioned force on the cam and this force is constant.

Lift of the cam: This is the vertical distance between the base circle of the Cam and the outer diameter of the Cam.

Base circle diameter = 0.054 m
Radius of the base circle = 0.027 m = r_1
Outer diameter of Cam = 0.150 m
Radius of the Cam = 0.075 m = r_2
Lift of the Cam = r_2-r_1
= (0.075-0.027) m
= 0.048 m

This is the maximum lift of the Cam for every 360º rotation of the Cam.

For every 30º rotation, it means the lift will be 0.048/12 = 0.004 m

For the first30º rotation of the Cam,

F = Ke = 856.43 N/m X 0.004 m = 3.43 N

Total vertical force Fv acting on the Cam Follower at 30º
= Pre-tension force + F + Weight of the Shuttle. This is the Normal force acting on the cam follower
= 81.36 + 3.43 + 0.85 = 85.64 N

Weight of thread is 0.009 g, which is considered negligible compared with the weight of the shuttle.

This is the Normal force acting on the Cam at 30º rotation. Same process is applied for every 30º to 360º rotation of the Cam. This Normal force (N) is resolved to the Tangential force (F_T) needed to drive the Cam.

$$\mu = F_T/N$$

where, μ = Co-efficient of Friction between the wood and the metal surface.

Calculation of tangential force:

$$F_T = \mu N$$

Considering the angle of inclination of the follower to the Cam surface (α) as shown in Fig. 4 and 5.

$F_T = \mu N \cos\alpha$
$\mu = 0.35$
$F_T = 0.35 \text{ X } 85.64 \cos 10º = 29.52N$

Same process is applied for every 30º to 360º rotation (Fig. 6). Ft is tangential force needed to drive the cam; Ft = $\mu N \cos \alpha$.

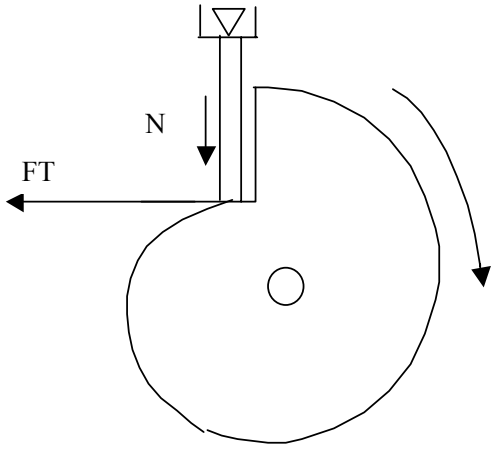

Fig. 4: Normal and tangential force on the cam

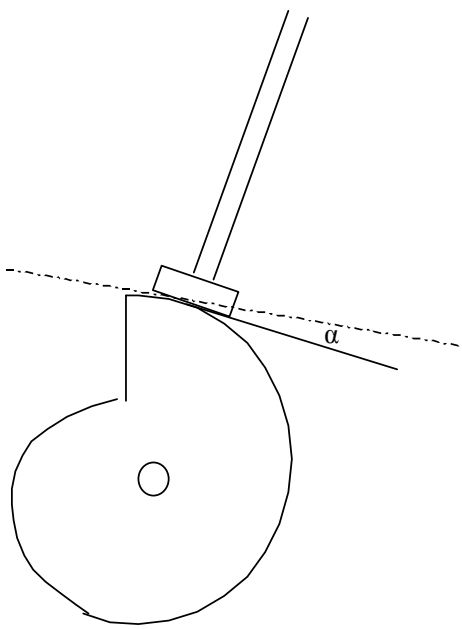

Fig. 5: Angle of inclination of the cam follower head to the cam surface

Calculation of Torque (T) at 30º rotation:

$$T = F_T X r$$

where,
r = distance between the Cam follower head and the centre of the Cam
r = (0.04+0.027) m = 0.031 m
T = 29.52N X 0.031 m=0.915Nm

Same process is applied for every30º to 360º rotation. Mean torque = 11.730/2π = 1.87 Nm

$$\text{Power} = \frac{(1.87 \text{ X } 2\pi \text{ X}1440)}{60} = 282 \text{ Watts}$$

Total power to drive the 3 Cams = (282 X 3) = 846 Watts.

A = 0.018 m
b = 0,018 m
c = 0.018 m
d = 0.017 m
θ = 20º,
α = 70º

$$R_1 + R_2 = W_1 + W_2 + W_3 \quad (1)$$

W_1 = 9.3 N i.e., Weight of the harness ($W_1 = W_2$)
W_3 = Weight of the linkage = 24.5 N

Taking moment about R_2:

$$R_1 \text{ Cos } \theta \text{ (b+c+d)} = W_1 \text{Cos } \theta \text{ (a+b+c+d)} + W_2 \text{ Cos } \theta\text{(c+d)} + W_3 \text{ Cos}\theta\text{(d)} \quad (2)$$

R_1 Cos20 (0.018+0.018+0.017)
= W_1 Cos20 (0.018+0.018+0.018+0.017)
W_2 Cos20 (0.018+0.017) + W_3 Cos20 (0.017)
R_1 (0.0498) = 0.6205 + 0.30959 + 0.3914.
R_1 = 1.3178/0.0498 = 26.46N

From Eq. (1):

R_2 = $W_1 + W_2 + W_3 - R_1$
= (9.3 +9.3 +24.5) N – 26.46N
= (43.1-26.46) N = 16.64N

Hence, R_2 = 16.64N, Torque = R_2 Cos α X d

where,
d = distance from the pin carrying the linkage bar to the center of the disc
α = 70º
d = 0.095 m
Torque (T) = (16.64 Cos70) × 0.095 = 0 .5407 Nm

The same process is used at every 30º interval for a complete rotation of the harness disc (Fig.7). The result is tabulated in Table 4.

Average torque = 0.431 Nm.
ω = 2πN/60
Power = (0.431 × 2π × 1440)/60 = 65watts

Total power required by the machine
= power required the three cams
+ power required by the harness
= (846+65) watts = 911 watts.

Shaft diameter: The Torsional Moment (M_t) acting on the shaft can be calculated or determined from this formula:

$$M_t = \frac{\text{KW X 1000 X 60}}{2\pi \text{ rev/min}}$$

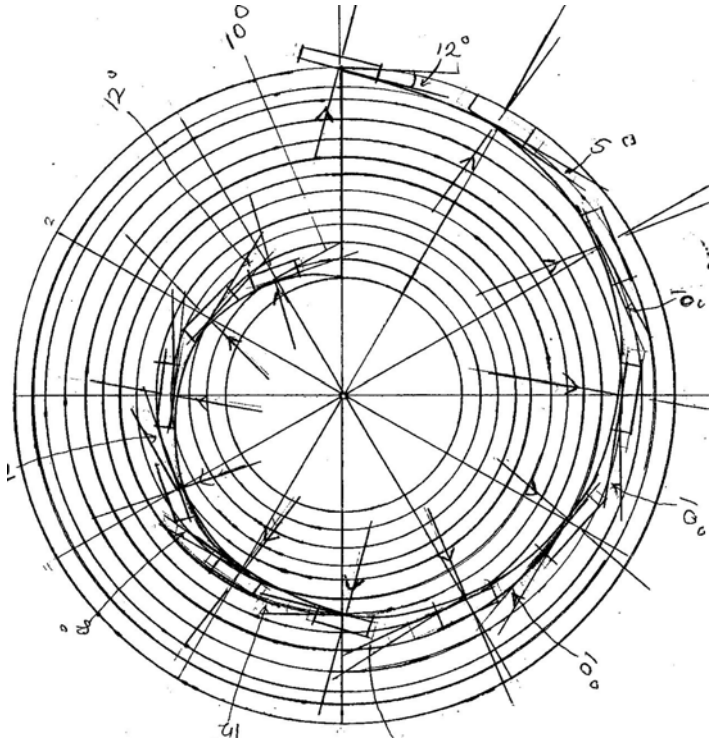

Fig. 6: Diagram for 30º rotation of the cam

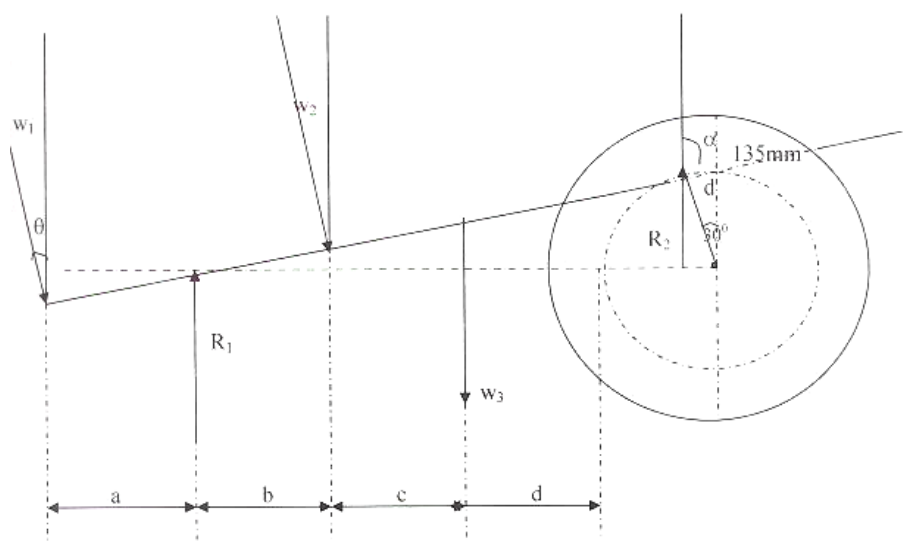

Fig. 7: Diagram for 30º rotation of the harness linkage

Putting in the values of 0.91KW and 960rev/min,

M_t = 9550 x 0.91/960 = 9.05 Nm

S_s(allowable) = 40 Mn/m^3 = 16 $M_t/\pi d^3$

d = 10.5 mm

Diameter of Shaft used = 10.5 mm

Forces exerted on the shaft of the machine: The Net force F_N, exerted by the belt on the shaft can be calculated as follows:

$$F_N = F1 - F_2 \qquad (1)$$ as shown in Fig. 8.

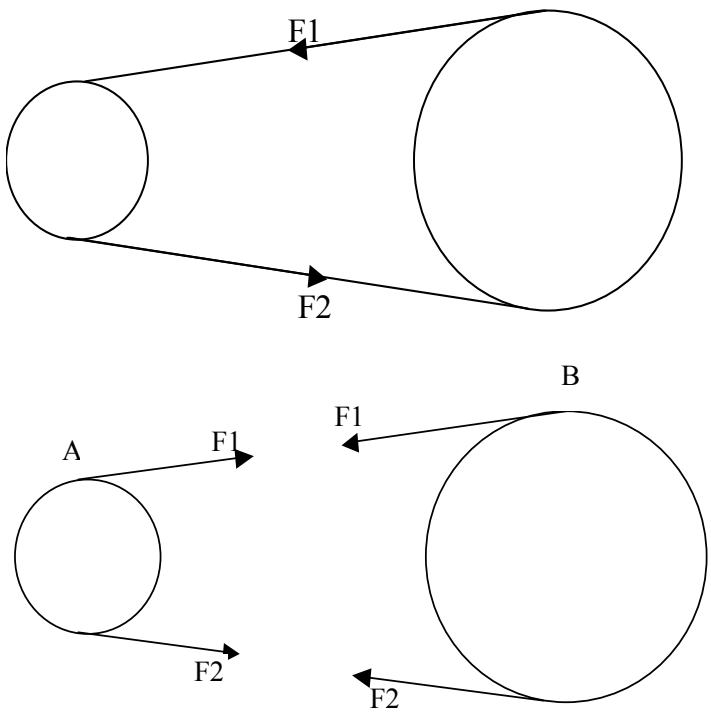

Fig. 8: Forces exerted by the belt on the pulleys

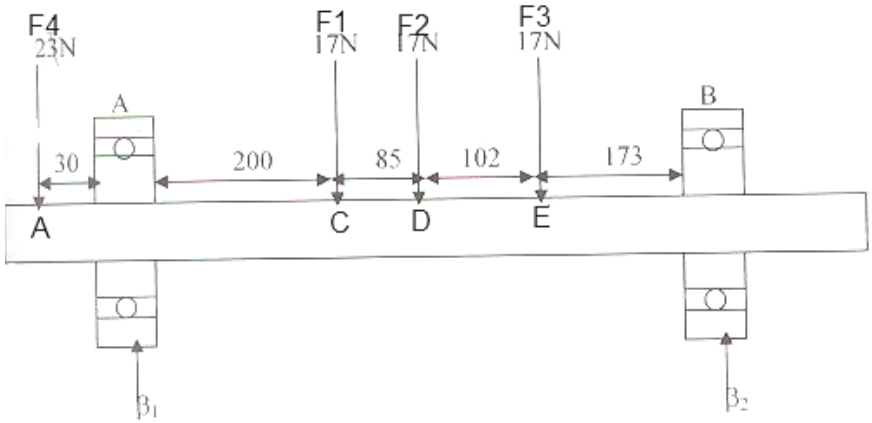

Fig. 9: Radial load on the bearings

Torque on pulley "A" T_A is calculated as:

T_A = Force X Diameter of pulley/2

= (F1+F2) $(D_A)/2$

Torque on pulley "B" T_B is calculated as (Fig. 9):

= (F1+F2) $(D_B)/2$

The magnitude of the net driving force is computed from the torque transmitted.

$$F_N = M_t/D/2 \quad (2)$$

Equation (1) combined with (2) gives:

$$F_1 - F_2 = M_t/R$$

$$M_t = R\,(F_1 - F_2)$$

where,

F_1 = Tight side tension

F_2 = Slack side tension

M_t = Torsional moment on the Shaft

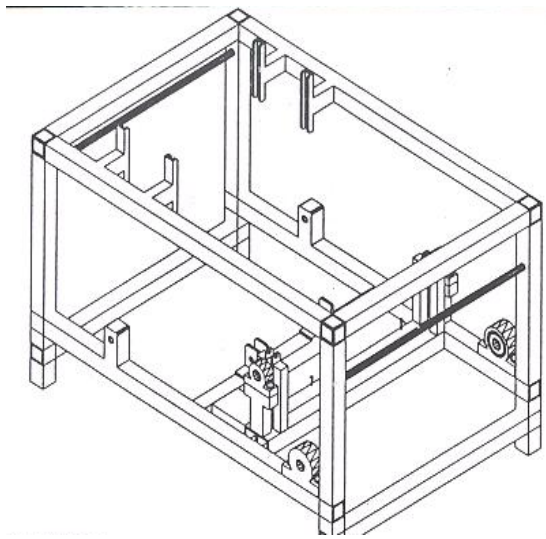

Fig. 10: Frame

R = Radius of driven pulley
= load on bearing A

$$\frac{F1CB}{AB} - \frac{F2DB}{AB} - \frac{F3EB}{Ab} - \frac{F4GB}{AB} = \text{load on bearing A}$$

$$\frac{(17\times360)}{560} + \frac{(17 \text{ X } 275)}{560} + \frac{(17\times173)}{560} + \frac{(23\times590)}{560}$$
= 48.76 N

$$F_1 + F_2 + F_3 + F_4 = B_1 + B_2$$
$$F_1 + F_2 + F_3 + F_4 = 74$$
$$74 = B_1 + B_2$$
$$74 - B_1 = B_2 = 74 - 48.76 = 25.24\text{N}$$

Material selection:
Solid shaft of the machine:
Material selected: A mild steel o 0.26% carbon.
Selection criteria: Readily availability, Easy Machinability, Strength, Non-toxicity.
Specification: Overall length = 560 mm,
diameter = 10.5 mm
Useful property values: It is cold drawn with a yield strength of 230 Mpa

Maximum Permissible working stress σ_b = 84 MPa
Permissible tensile strength = 56 MPa

Pulley of the machine: The choice of material for the pulley depends largely on the trends associated with the pulley usage. The basic materials for pulley are:

- Aluminum
- Cast iron

Aluminium has the advantage of light weight and the ability to be easily machined but it has the disadvantage of being prone to distortion and wear because of its ductility. Cast iron has the advantage to break modern sudden impulse or shocks because of its brittleness. For this research work, aluminium type is used.

Material Selected is cheap and affordable, resistant to heat and wear, easily machinable.

Belts:
The types of belts available are:

- Vee belt
- Flat belt
- Toothed belt

The vee belt is chosen for this research for these reasons

- It has higher loading permissible before belt slip
- It allows for short distance and high speed ratio without an increase of load on bearings

Bolts and nuts: The hexagonal is used because it takes up less space, and is therefore lighter than a square head having the same distance across flat (Parker and Pickup, 1976)

Material Selected: Mild Steel
Selection Criteria: High Strength and Hardness
Specification: 10 mm bolts and nuts

The frame: This is made from 1 inch square section of mild steel material (Fig. 10)

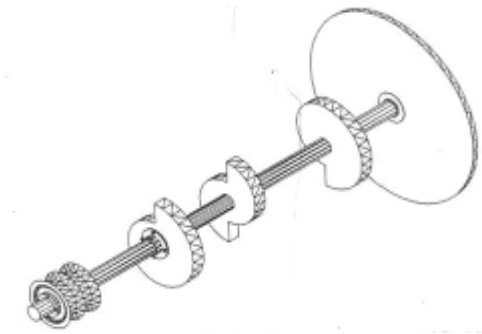

Fig. 11: Cam discs and Shaft

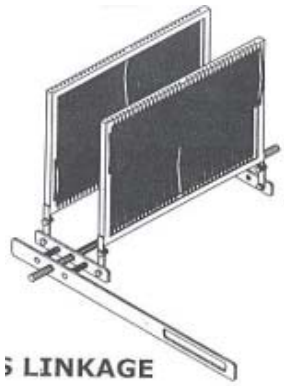

Fig.12: Harness linkage

Fig. 13: The Beater

The cam: Disc cams are used and the material used for the disc cam is hardwood. Hacksaw, chisel and hammer were used to cut the disc cam spoken shave was used to smoothen the surface according to the design then followed by the drilling (Fig.11).

The cam shaft: This is made from a solid shaft of mild steel with the specified required length; machining operations were carried out on it on lathe machine (Fig.11).

The harness linkage: This lifts and opens the harness to create a shed opening for shuttle to pass and lay

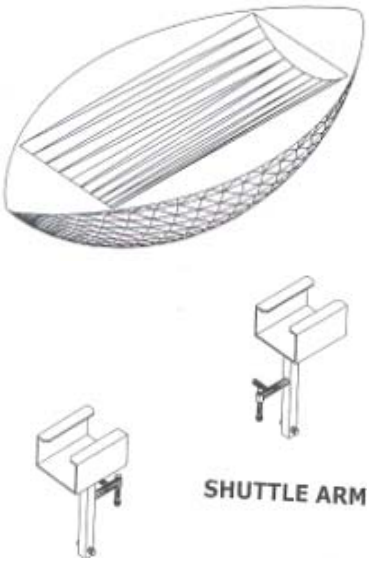

Fig. 14: The Shuttle and the Shuttle Arms

successive weft on the warp. It is made of mild steel (Fig. 12). The linkage is attached to the wheel mounted on the camshaft by a slot and a hole drilled on the wheel to accommodate the vertical movement of the harness while the shaft rotates. It converts the rotary motion of the disc wheel to vertical displacement of the harnesses. A sliding grid on the flame maintains the vertical displacement of the harnesses.

The Beater: This is made of mild steel rectangular in shape with metal strong reeds vertically attached (Fig. 13). The ½ inch square pipe is cut according to the dimension on the design, chamfered and welded together. A hook is put on it for the attachment of compressive spring. The beater is attached to a frame on a loose rivet joint.

The Shuttle: The shuttle is made of hardwood and oblong shape. The shuttle arm is made of mild steel of ½ inch to hold the arms and a spot steel sheet beat according to the design to accommodate frame by a boat and nut loose rivet joint (Fig. 14).

The Cloth Beam: The cloth beam is solid shaft of 25 mm diameter cut, machined and attached to a pulley (Fig. 15).

Joining process: The joining processes used are mainly
- Welding
- Bolt and nut (loose rivet)

Maintenance: The type of maintenance recommended for this mechanized loom is the routine maintenance. The moving parts, the shaft, the bearing and linkage should be lubricated often.

Fig. 15: The Cloth Beam

RESULTS AND DISCUSSION

This study has outlined the design and construction of an efficient and cost-effective Mechanized Loom to be used by local weavers to weave 300 mm width *Aso-Oke* which is wider than the existing 100 mm width *Aso-Oke*. As could be seen in the design, it uses a motor, shaft, 3 cam discs, 2 harnesses, 2 shuttle arms, a shuttle, belt and pulley, a beater to compress the woven cloth in a safe, faster, easier, neater and less labour intensive manner. The aim of carrying out this research has been achieved. The study shows that the following benefits and advantages could be derived from this research work.

- Increase in productivity of *Aso-Oke* due to increase in width of the weave. i.e., from 100 mm width to 300 mm width
- Saving time by reducing the production time
- Reduction in the manual labour associated with throwing of shuttle with hand and winding or rolling the woven cloth with hand
- Enhancing neater and greater accuracy in the dimension of the weave
- Easy operation
- Production of Aso-Oke of better and improved quality
- Increase productivity at low cost

The procedure in getting the power to drive the machine as seen in Table 1, 2, 3, 4 and Fig. 16 and 17 is simple and easy to understand. The graph in Fig. 17 shows that the motion of the harness is symmetric about 180º. From 0-180º and from 180-360º in the opposite way which is a complete cycle of one rotation of the harness. The upper limit in the 2 apex points of the graph in Fig. 17 is slightly different because of friction between the harness linkage and the metal disc. In Fig. 16, the graph is a straight line graph with a positive gradient. This is caused by the gradual increase in the rise motion of the cam follower on the disc cam from 0-360º when the follower drops or falls and starts to rise. The materials used are readily available and easy to get. The fabrication and joining process are easy and not expensive and the maintenance is affordable.

Table 1: Normal force acting on the cam at every 30º rotation

θ (deg)	Extension (e) m	Force constant (K)	F = Ke (N)
30	0.004	856.430	3.426
60	0.008	856.430	6.851
90	0.012	856.430	10.277
120	0.016	856.430	13.703
150	0.020	856.430	17.129
180	0.024	856.430	20.554
210	0.028	856.430	23.980
240	0.032	856.430	27.406
270	0.036	856.430	30.831
300	0.040	856.430	34.257
330	0.044	856.430	37.683
360	0.048	856.430	41.109

Table 2: Tangential force at every 30º rotation

θ (deg)	Normal force (N)	α (deg)	Ft
30	85.636	10	29.517
60	89.061	12	30.492
90	92.487	10	31.879
120	95.913	10	33.060
150	99.339	8	34.430
180	102.764	12	35.181
210	106.190	8	36.805
240	109.616	10	37.783
270	113.041	10	38.963
300	116.467	10	40.144
330	119.893	5	41.803
360	123.319	12	41.928

Table 3: Torque (T) at every 30^0 to 360^0 rotation

θ (deg)	r (m)	Torque (Nm)
30	0.031	0.915
60	0.035	1.067
90	0.039	1.243
120	0.043	1.422
150	0.047	1.618
180	0.051	1.794
210	0.055	2.024
240	0.059	2.229
270	0.063	2.455
300	0.067	2.690
330	0.071	2.968
360	0.075	3.145

r = radius of the base circle plus extension (e)

Table 4: Determination of Torque for the harness linkage

θ (deg)	α (deg)		R1(N)	R2(N)	Torque (Nm)
30	20	70	26.46	16.64	0.5407
60	17	73	28.42	14.68	0.4077
90	0	0	25.46	17.64	1.6760
120	7	97	27.88	15.22	- 0.1762
150	10	100	27.66	15.44	- 0.2547
180	12	78	30.14	12.96	0.2560
210	15	104	28.15	14.95	- 0.3435
240	5	95	28.63	14.47	- 0.1198
270	0	0	24.21	18.89	1.7900
300	13	77	26.48	16.62	0.3550
330	20	70	28.39	14.71	0.4780
360	18	72	30.12	12.98	0.3800

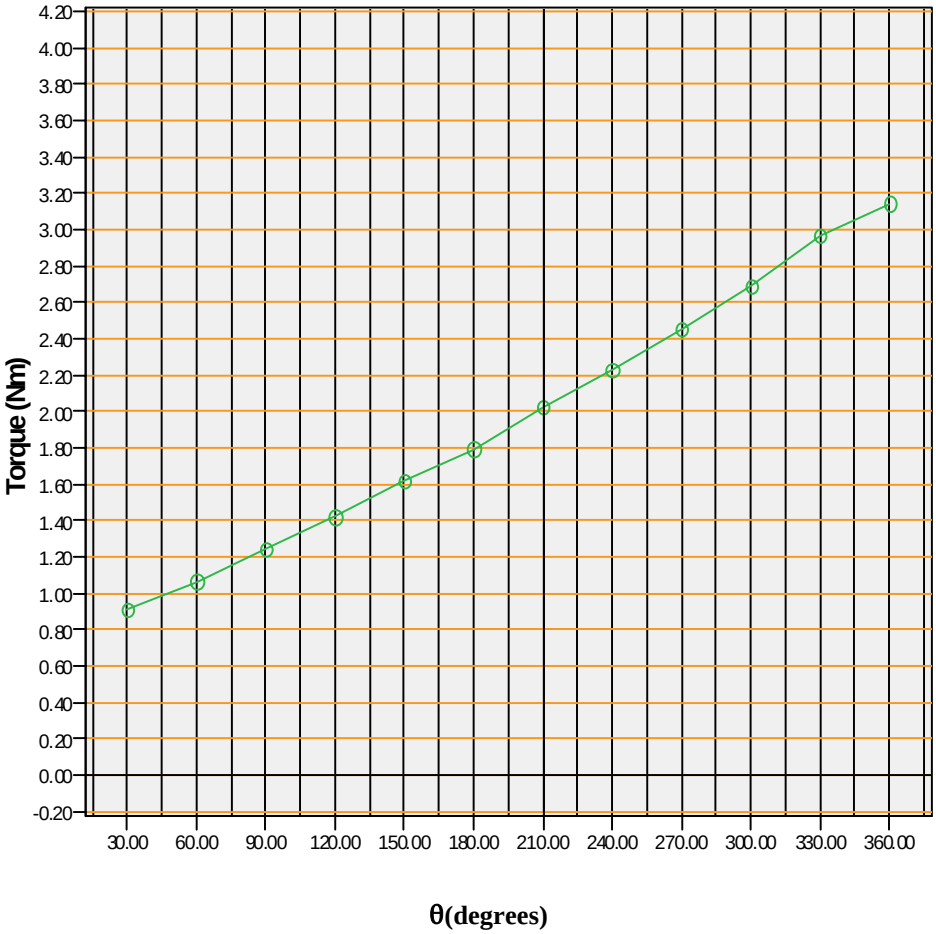

Fig. 16: Graph of Torque against θ for the Cams

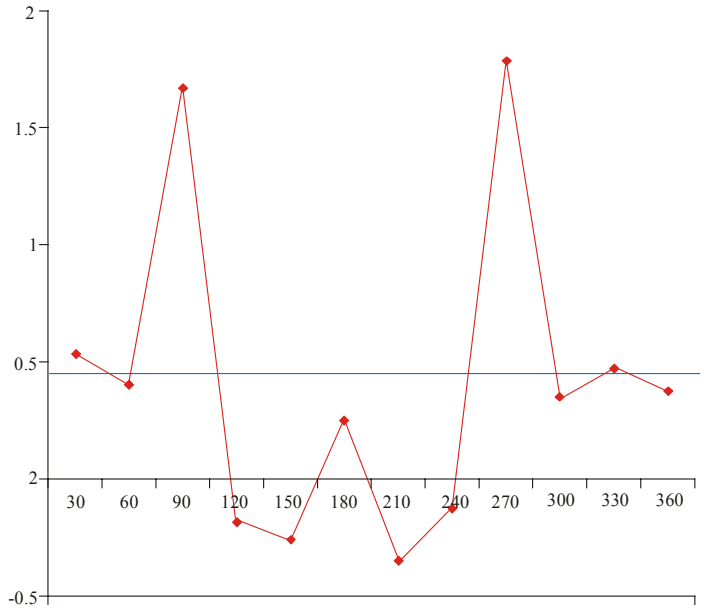

Fig: 17: Graph of Torque against for the Harness

CONCLUSION

The constructed Mechanized Loom has confirmed the working principle of a loom. It has been designed and constructed to make its operation easier and efficient. The study shows that the operational analysis is easy to understand and the cam shaft operational analysis is simple. The machine requires less human energy and the movement of the mechanisms is relatively smooth and of a reasonable speed. It is therefore, appropriate for large production, while the accuracy is reliable. The various parts of the machine are easy to manufacture in the workshop. But it requires good technical skills in engineering drawing and machine design. The machine is cheap and does not contain intricate and expense parts. It is therefore easy to construct. The main advantage of this loom over the existing hand and foot loom used by local weavers is that the throwing of shuttle through the tensioned opened weft carried by the harness and compression of the woven cloth are done automatically, these operations require no additional work on the part of the operator as being required in the hand loom and foot loom. The size also will make it very easy to install anywhere with the use of electricity or portable generator. The use of the designed mechanized loom will greatly improve the productivity of small scale or local weavers of *Aso-Oke*.

RECOMMENDATION

The designed and constructed Mechanized Loom has been recommended for local weavers because it is cheap, faster, easy to operate. It has better accuracy and can weave *Aso-Oke* of 300 mm which is wider than the existing 100mm *Aso-Oke* thereby increasing productivity.

ACKNOWLEDGMENT

The author is grateful to Prof. I.A. Adetunde, the Dean of Faculty of Engineering, University of Mines and Technology, Tarkwa, Ghana and Dr. E.S.D Afrifa of Mechanical Engineering department, Kwame Nkruma University of Science and Technology, Kumasi, Ghana for their valuable advice.

REFERENCES

Babara, M., 2008. Small Loom and Freedom Weaving. Creative Publisher International Quayside, pp: 22-45, ISBN: 970-1-58-923-361-4.

Collier, B.J., G. Phyllis and G. Tortora, 2001. Understanding Textiles. 6th Edn., Prentice-Hall, pp: 608. ISBN: 0-13-021951-7.

Hollen, N., J. Saddler, A. Langford and S.J. Kadolph, 1988. Textile. Macmillan, New York, pp: 190-191. Reg Number/Date TX 0002301413/1988-04-21.

Johnson, W. and P.B. Mellor, 1973. Engineering Plasticity. 1st Edn., Van Nostrand Reinhold Company, pp: 1. ISBN: 0442302347.

Kadolph, S.J.G., 2007. Textiles. 10th Edn., Pearson Prentice Hall, Upper Saddle River, NJ 07458, pp: 496, ISBN: 0-13-118769-4.

Parker, M.A. and F. Pickup, 1976. Engineering Drawing with Worked Examples. 3rd Edn., Hutchinson, pp: 110. ISBN: 0091264510.

Robert, M., P.G. Tortora and G, Fairchild, 2000. Fairchild's Dictionary of Textiles. 7th Edn., Fairchild's Books and Visuals, pp: 668, ISBN: 1-87005-707-3.

Tortora, P.G., 1987. Understanding Textiles. Macmillan Publishing Company, New York, pp: 231-233. ISBN: 0130219517.