Research Journal of Applied Sciences, Engineering and Technology 3(9): 923-927, 2011
ISSN: 2040-7467

Submitted: June 28, 2011 Accepted: August 13, 2011 Published: September 20, 2011

Impact Analysis of Narrow Loom Beat-up Mechanism

[1]Nurudeen A. Raji, [1]Andrew A. Erameh, [1]Felix O. Ajayi and [2]Rafiu O. Kuku
[1]Mechanical Engineering Department, Igbinedion University, Okada. Nigeria
[2]Mechanical Engineering Department, Lagos State University, Ojo, Nigeria

Abstract: The study considers the impulse-momentum method for the analysis of the narrow loom with impulsive force and discontinuous velocities. The system equation of motion is analyzed to determine the main body velocities used for the system variables without introducing rotational coordinates or the turning effect of the system follower on the beater. Discontinuities in the velocity are observed when an impact force results from the beat-up action of the beater on the weft-yarn. Formulation between the velocity jump and displacement is presented for the system response. The impact phenomenon is characterized by the rise in the system velocity resulting from the vibration propagation through the system. The velocity is observed to increase as the system displacement response increases. This is typical of a high speed mechanism of this type mostly used in the textile industry if not controlled.

Key words: Beater, beat-up, impact, impulse, momentum, multibody, system

INTRODUCTION

The beat-up system is a substructure of the narrow horizontal weaving loom. The system as shown in Fig. 1 is designed to generate the Dwell-Rise-Return-Dwell (DRRD) intermittent motion for the beat-up action of the narrow loom as discussed by Raji and Adegbuyi (2003). The beater reed attached to the slay-bar is synonymous to a flexible body, which tends to responds in deflection when it beats the weft into the yarn. A general technique for the modeling elastic mechanisms of this kind has been well established in the field of mechanism dynamics as detailed in Sandor and Erdman (1984). The key parameters which govern the response for such impacts were identified and their effect on impact response had been examined through numerical simulations by Christoforou and Yigit (1998). It was shown that three non-dimensional parameters are sufficient to completely govern the low velocity impact response of such structures. The impact conditions could enable the prediction of the system response as well as the maximum impact force without running a simulation or conducting an experiment. The impact response of different structures with arbitrary boundary conditions can be scaled in a similar way. Guo *et al*. (2003) investigated the contact impact response of a flexible bar struck by a rigid body by using a substructure synthesis method. A model parameter that determines the validity of the model was derived. Simulations were carried out to obtain the contact force time histories during impact under different conditions. Several optimum values of the model parameter were suggested considering both the computational efficiency and the accuracy of solutions.

When the beater of the narrow loom beats the yarn, impact force is generated. The system experiences increasing velocity and joint reaction forces due to the impact. This effect is the response of the system to the impact phenomena of the beat-up action. The effect of impact on the dynamic behavior of the beater is an important consideration for the control of the beat-up mechanism (Raji *et al*., 2010a, b). The beater substructure could be considered as a flexible beam attached to a rotating body. Considerable efforts were directed towards acquiring information on system performance using structural system analysis procedures. The system analysis is usually carried out by developing mathematical models to study the displacement and velocity of the system when subjected to impact force.

The several attempts of the use of different analysis to determine the system performance include the use of finite element model to predict the transient response of substructures which are subjected to impact loads as discussed by Yin and Wang (1999) and Wang and Wang (2001). Wang and Wang (2001) developed a time finite element method for the steady-state solutions of vibrating elastic mechanisms. The governing equations of motion link were described in a local coordinate system with constant coefficients. In utilizing time finite elements which discretize the forcing time period into a number of time intervals, the elastic motion is approximated by a set of temporal nodes of all spatial degrees of freedom of the mechanism system. The result is a set of linear algebraic system with a sparse structure that can be solved effectively.

Modal analysis as discussed by could also be used to predict transient response of rotating beam having

Corresponding Author: Nurudeen A. Raji, Mechanical Engineering Department, Igbinedion University, Okada. Nigeria

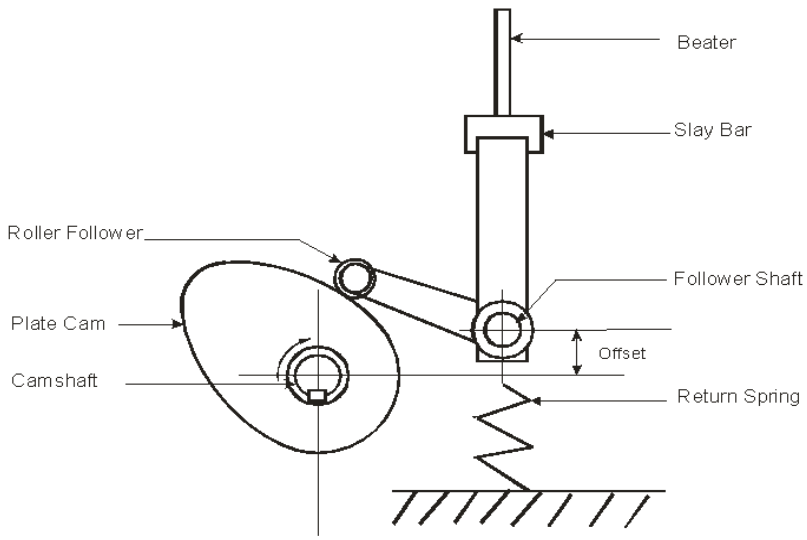

Fig. 1: Schematic diagram of the model mechanism

complex configuration, and estimation of impulse response problem for high frequency regimes could be obtained. Sim *et al*. (2007) discussed modal interval analysis method to estimate modal parameters, Frequency Response Function (FRF), and mode shapes of system with uncertain-but-bounded inputs. In their study the modal analysis and interval calculus was used to investigate the method of computing upper and lower bounds of parameters such as, the natural frequencies, modal shapes, and FRFs. Practical application of the modal analysis had been applied by Lim *et al*. (2009) to a multi-packet blade system undergoing rotational motion. The blade system was idealized as tapered cantilever beams that are fixed to a rotating disc. The stiffness coupling effects between the blades due to the flexibilities of the disc and the shroud were modelled with discrete springs.

The component mode analysis method for predicting the response of such dynamic systems has also been well studied by some researchers (Takewaki and Uetani, 2000; Shyu *et al*., 2000). In the literatures; the major issues related to the analysis of large structure systems by sub-structuring were investigated. Tran (2001) described a procedure based on the use of interface modes to reduce the size of the coupled system in the component mode synthesis methods. The procedure was applied to structures with cyclic symmetry in combination with the wave propagation properties. These methods were tested on a numerical example and provide the eigensolutions and the frequency response to harmonic forces in good agreement with the results obtained with classical component mode synthesis methods. The method is suitable for whole structure designed such that major parts with different structural properties and characteristics could be analyzed independently. The dynamic behavior of rotating beam was studied by Thakkar and Ganguli (2004). Governing equations were derived using the Hamilton's principle for a beam undergoing transverse bending, torsion and axial deformation over a range of rotating speed. The method allow for the derivation of the equation of motion in matrix form to investigate the varying parameters such as the rotational speed of the beam. Yoo and Chung (2007) proposed a modeling method employing multiple reference frames to find the modal characteristics of rotating structures that consist of multibeams. In the modeling method, a geometric stiffening term was included to accelerate the convergence of solutions. Other methods applicable to such analysis include dynamic analysis (Benfratello and Muscolino, 1998; Park and Kim, 1999), the variational analysis; (Yang and Pizhong, 2005; Escalona *et al*., (1998).

This paper discusses the dynamic response of the beat-up mechanism of a narrow loom subjected to impact during the beat-up action. In the study we intend to accurately determine the system response due to impact induced excitation using the impulse momentum procedure. The use of impulsive dynamics in flexible systems means that continuous contact is simulated as a virtual succession of instantaneous impacts. The number of fictitious impacts increases with the number of assumed modes (Mayo, 2007). The analysis of the application of the impulse-momentum balance equations to flexible multibody systems had been studied by Escalona *et al*. (1998) who have shown that the generalized impulse-momentum balance equations are still valid in predicting the impact response of systems dynamic. The balance equations are the result of

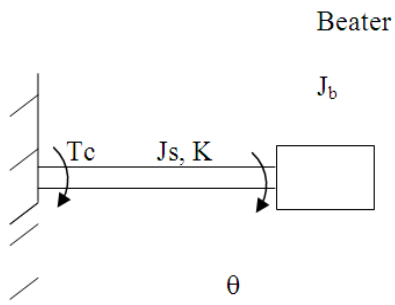

Fig. 2: Simplified model for the system

extending impulsive dynamics to the collision of flexible and constrained bodies. Application of the impulse-momentum balance in their study provides a system of algebraic equations that is solved for the velocity jumps and the impulses associated with the contact force and the reactions involved.

ANALYSIS FORMULATION

In discussing the dynamic behavior of the beater mechanism, our intent is in the post impact behavior of the system. The system could be modeled as shown in Fig. 2. The study by Christoforou and Yigit (1998) provides guidelines for choosing appropriate simple models for impact loading. The equation of motion of the beater system can thus be represented as in Eq. (1):

$$J\ddot{\theta} + K\theta = T \tag{1}$$

where, $J = J_S + J_b$

J_S is follower shaft inertia

J_b is the beater inertia

K is the shaft stiffness

θ is the beater displacement

The velocity and acceleration is denoted by $\dot{\theta}$ and $\ddot{\theta}$, respectively. is the generalized external excitation. The excitation includes the impulse torque and the resulting torque associated with the turning effect of the follower on the beater.

$$T = Ti + Tc \tag{2}$$

where, Ti is the impulsive torque due to impact, Tc is the torque applied on the shaft.

Applying the impulse-momentum method require integrating the equation of motion with respect to time. Thus integrating Eq. (1) over the impact period $T_n < T < T_{n+1}$ yields Eq. (3) for the beater system.

$$\int J\ddot{\theta}\,dt + \int K\theta dt = \int Tidt + \int Tc\ dt \tag{3}$$

Assuming that the turning effect of the motor on the beater is continuous as expected:

$$\lim_{\Delta T \to 0} \int_{T_n}^{T_{n+1}} Tc\ dt = 0 \tag{4}$$

The impulsive torque due to impact can be written as:

$$Ti = M(t)\{\partial \in / \partial\theta\} \tag{5}$$

where, $\partial \in / \partial\theta = la$, l is the length of the beater from the axis of rotation to the impact point, a is the angle subtended by the shed opening of the narrow loom:

$$\lim_{\Delta T \to 0} \int_{T_n}^{T_{n+1}} Ti\,dt = \{\partial \in / \partial\theta\}\int M(t)dt = laHo \tag{6}$$

where, Ho is the systems impulse and is defined as the change in the angular momentum of the beater. The change in the angular momentum could be estimated from the velocity expressions for the rise and return motion of the beater system discussed by Raji and Adegbuyi (2003) and is thus expressed as:

$$Ho = Jl\left[V_{\mathrm{Re}}(t) + V_{Ri}(t)\right] \tag{7}$$

where, τ is the non-dimensional beater displacement, $V_{Re}(\tau)$ and $V_{Ri}(\tau)$ are the velocities of the beater after impact and before impact respectively corresponding to the beater-return and beater rise which are expressed respectively as:

$$V_{Re}(\tau) = -20/\beta\ (1/3 - \tau^3 + 2/3\ \tau^4) \tag{8}$$
$$V_{Ri}(\tau) = 20/3\beta\ (3\tau^2 + 5\tau^3 + 2\tau^4) \tag{9}$$

where, $\tau = \theta/\beta$ and β is the specified maximum displacement allowed for the beater. The non-dimensional approach for the modal coordinates accommodate for the infinitesimal displacement that may occur in the system during response.

Substitute Eq. (8) and (9) into Eq. (7) yield:

$$Ho = -\frac{20J}{3\beta}\left(1 + 3\tau^2 + 2\tau^3 + 4\tau^4\right) \tag{10}$$

The first term in Eq. (3) can be integrated directly to obtain:

Table 1: Velocity for impact torque

Beater displacement	0	0.1	0.2	0.3	0.4	0.5	0.6	0.7	0.8	0.9	1
Velocity	1	1.0324	1.1424	1.3564	1.7104	2.25	3.0304	4.1164	5.5825	7.5124	10

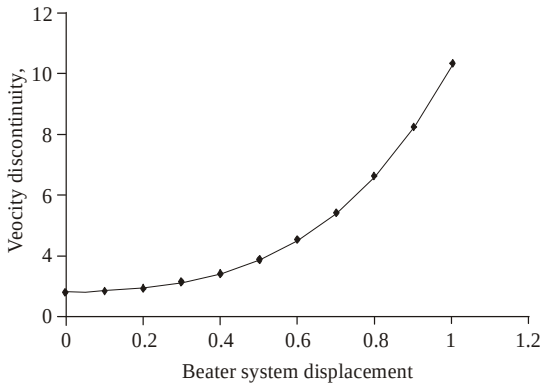

Fig. 3: The effect of Impact torque on velocity of the beater system

$$\lim_{\Delta T \to 0} \int_{Tn}^{Tn+1} J\ddot{\theta}\, dt = J\Delta\, \dot{\theta} \tag{11}$$

is the velocity response of the system to the external excitation. Since the system's configuration is continuous, the second term in Eq. (3) is zero.

$$\log_{\Delta T \to 0} \int K\theta dt = 0 \tag{12}$$

Substitute Eq. (4), (6), (10), (11) and (12) into Eq. (3) in non-dimensional form, the system response is thus obtain as:

$$\Delta\, \tau |\Phi| = 1 + 3\tau^2 + 2\tau^3 + 4\tau^4 \tag{13}$$

where, $\phi = -0.15\beta/l^2$ a is determined by the specification of the shed opening, the length of the beater and the beater allowed maximum angular displacement.

RESULTS AND DISCUSSION

Equation (13) is used to study the velocity vector due to impact. Figure 3 shows the velocities of the system immediately after impact for the different number of mode shape in dimensionless form between 0 and 1. The result of the study is summarized in Table 1. The Fig. 3 reveals that the velocity is proportional to the modal displacement from the impact point. As the mode increases, the velocity increases. This implies that the impulse response grows without bound with time. Such system is considered unstable.

CONCLUSION

In this study, the dynamic response of the beat-up mechanism for a narrow horizontal loom has been studied using the impulse-momentum balance analysis method. The velocity of the system due to the impact force generated within the system after the beating action have taken place is investigated and found to increase in a proportional fashion with the modal coordinate of the system. The modal coordinates are condensed to vary in a non-dimensional form between 0 and 1 from the joint location to the point of impact of the beater, the non-dimensional approach for the modal coordinates accommodate for the infinitesimal displacement that may occur in the system during response. It is shown that the velocity equation obtained using the impulse momentum procedure is reasonable and consistent with the treatment of impact problems on similar systems discussed in several literatures. The study can be applied for the parametric study of the system transient response considering the turning effect of the follower on the beater system. The limitation of this model is the assumption for a single degree of freedom. Considering a generalized forcing function for such system as could be identified in high-speed textile machinery can develop a more rigid model. The system-stability constitutes one of the most important problems in the analysis and dynamic of the system and the stability control of such system should be a concerned issue.

REFERENCES

Benfratello, S. and G. Muscolino, 1998. A perturbation approach for the response of dynamically modified structural systems. Comp. Struct., 68: 101-112.

Christoforou, A.P. and A.S. Yigit, 1998. Effect of flexibility on low velocity impact response. J. Sound Vibrat., 217(3): 563-578.

Escalona, J.L., J.M. Mayo, and J. Dominguez, 1998. A critical study of the use of the generalized impulse-momentum balance equations in flexible multibody systems. J. Sound Vibrat., 217: 523-545.

Guo, A., J. Hong and H. Yang, 2003. A dynamic model with substructures for contact-impact analysis of flexible multibody systems. Sci. China (Series E), 46(1): 33-40.

Lim, H.S., J. Chung and H.H. Yoo, 2009. Modal analysis of a rotating multi-packet blade system. J. Sound Vibrat., 325: 513-531.

Mayo, J., 2007. Impacts with friction in planar flexible multibody systems: Application of the momentum-balance approach. 12th IFToMM World Congress, Besançon (France), June 18-21.

Park, J.H. and J.H. Kim, 1999. Dynamic analysis of rotating curved beam with a tip mass. J. Sound Vib., 228(5): 1017-1034.

Raji, N.A. and P.A.O Adegbuyi, 2003. Synthesis of cam-follower system for the beater mechanism of the narrow horizontal loom. Nigerian J. Mech. Eng., 1(1): 37-48.

Raji, N.A., V.O. Ozor and A.A. Erameh, 2010a. Transient response of damped beat-up mechanism for narrow looms. J. Eng. Appl. Sci., 5(1): 30-35.

Raji, N.A., A.A. Erameh, V.O. Ozor, F.O. Ajayi and R.O. Kuku, 2010b. Modeling narrow loom beat-up system with cam transmission influence. J. Eng. Appl. Sci., 5(3): 206-210.

Sandor G.N. and A.G. Erdman. 1984. Advanced Mechanism Design. Prentice-Hall, New Jersey.

Shyu, W.H., G. Jianmin, G.M. Hulbert and Z.D. Ma, 2000. On the use of multiple quasi-static mode compensation sets for component mode synthesis of complex structures. Finite Elements in Analy. Design, 35: 119-140.

Sim, J.S., Q. Zhiping and W. Xiaojun, 2007. Modal analysis of structures with uncertain-but-bounded parameters via interval analysis. J. Sound Vibrat., 303: 29-45.

Takewaki, I. and K. Uetani, 2000. Inverse component-mode synthesis method for damped large structural systems. Comp. Struct., 78: 415-423.

Thakkar, D. and R. Ganguli, 2004. Dynamic response of rotating beams with piezoceramic actuation. J. Sound Vibrat., 270(4): 729-753.

Tran, D.M., 2001. Component-Mode synthesis methods using interface modes application to structures with cyclic symmetry. Comp. Struct., 79: 209-222.

Wang, Y.M. and Z. Wang, 2001. A time finite element method for dynamic analysis of elastic mechanisms in link coordinate systems. Comp. Struct., 79: 223-230.

Yang, M. and P. Qiao, 2005. Higher order impact modeling of sandwich structures with flexible core. Int. J. Solids Struct., 42(20): 5460-5490.

Yin, X.C. and L.G. Wang, 1999. The effect of multiple impacts on the dynamics of an impact system. J. Sound Vibrat., 228(5): 995-1015.

Yoo, H.H., J.M. Kim and J. Chung, 2007. Equilibrium and modal analyses of rotating multibeam structures employing multiple reference frames. J. Sound Vibrat., 302: 789-805.