Research Journal of Applied Sciences, Engineering and Technology 4(12): 1785-1789, 2012
ISSN: 2040-7467

Submitted: January 26, 2012 Accepted: February 16, 2012 Published: June 15, 2012

Secure Logistic Management System Using Wireless Technologies

K.R. Prasanna and M. Hemalatha
School of Computing, SASTRA University, Thanjavur, Tamil Nadu, India

Abstract: This study proposes an idea of solving problems arising in logistics management, with the aid of wireless communication technologies like RFID, GSM and GPS. This study includes the modules of goods delivery status, vehicle location tracking, overloading of goods, interlocking system and finding out the misplaced goods. The integrated system consists of RFID and GPS technology for goods count and vehicle tracking. Overloading of goods is identified with the help of the weight sensors. If the goods are misplaced, the secure system will indicate the authorized base station and will not allow the vehicle to move. If the wrong goods are taken out from the cargo the buzzer will be ON and the message will be intimated to the concerned person through GSM.

Key words: GPS, GSM, interlocking system, PIC microcontroller, RFID, weight sensor

INTRODUCTION

With the increase in economic development, enterprises are also getting increased proportionally. The competition between the enterprises increases as the number of enterprises increases. To improve the logistic enterprise quality they have to ensure the security of the good that has to be delivered. Many advanced technologies have to be implemented to provide security to the goods. Technologies like GPS, GSM, etc., to be used which helps in finding out the vehicles location and also ensures the security to the system.

In this proposed system RFID, GPS, GSM and weight sensor are used. RFID technology is called as ubiquitous because it is used for real time tracking. Authentication is must for goods because there is a chance of misplacement of goods. Each company has a particular id no. When the vehicle reached the destination, the user has to enter the id no. After validating the key, goods are allowed to taken out from the vehicle. RFID tag is placed in each goods and RFID reader is placed in the vehicle. The RFID tag contains epic number, which will be predefined in the controller.

If in case the user takes the wrong goods out from the vehicle the three actions that will be carried out automatically are:

- Buzzer indication
- Sending message through GSM to source that the wrong goods are taken out from the vehicle
- Will lock the vehicle and will not allow the vehicleto move

GPS is placed in the vehicle for locating the vehicle at anytime. If the user wants to know about the vehicles location details the user can send a message to the GSM. It will automatically send the GPS data to the particular user. GSM is widely usedfor sending the message when all the goods are delivered. It will automatically send the message to the base indicating that all the goods are delivered properly and also sends the location where the goods are delivered.

LITERATURE REVIEW

The RFID and positioning system technologies play a key role in supply chain management. RFID tagged goods leave from the warehouse and the information regarding delivery of these goods to the end party is not acknowledged and so there is a possible chance that the goods do not reach their destination. To monitor the whole warehouse, web based application is used (He *et al*., 2009).

There is a spatial information technology like GSM, GPS and RS etc... These technologies are popularized and widely used in intelligent dispatching, but here it is used in agriculture to monitor the farms and also the intelligent dispatching. Because in large farms there are number of sub farms, so it is very difficult to manage them. To solve this problem the farm vehicle monitoring and intelligent dispatching system is to be used. In this system the driver has to save the data into the IC card with personnel and vehicle identification from the monitoring centre.

The IC card is inserted in the card reader. After dispatching is finished the task will be allocated for the

Corresponding Author: K.R. Prasanna, School of Computing, SASTRA University, Thanjavur, Tamil Nadu, India

driver and then it will be written into the IC card. When the IC card is inserted into the card reader it will automatically display the location in the monitoring screen and will be directly sent from the farm house to the desired location (Cai-congwu *et al.*, 2004). The intelligent vehicle terminal system is an automatic system for identification of cargo loaded goods in the real time and also the vehicle location takes place by GPS. The main component used is MSP430.

It is an ultra low power consuming device used for interfacing the devices and monitoring the process continuously. The RFID tag information and GPS data is sent to the central processing unit continuously to improve the real time management in logistics. It also improves the reliability of the system and makes the digital logistics management an efficient process (Huiping *et al.*, 2008). The dynamic scheduling technique is used in the logistics management. While using this technique the scheduling process will be optimized and also the vehicle's routing problem is solved.

To compare with various statistical data, it is very reliable to solve the vehicle routing problem (Huiping *et al*., 2008). This paper deals with 3S technologies. 3S technologies are GPS, (Global Positioning System) GIS (Geographic Information System), RS (Remote Sensing) and also use the multi technologies like charged coupled devices. Charged coupled devices send the details of traffic flow information continuously and also update the GIS database. The connection is not only from node to node communication but also the logistics monitoring places.

From this the information in logistics are more reliable (Chengxin *et al*., 2007). Communication is very important for vehicle monitoring to improve the communication service system in vehicle. This study mainly focuses on performance reliability and reusability of communication server. For achieving this, GPRS and GSM are used. One can also apply the non blocking I/O technique to optimize this process. The J2EE design scheme and open source technique is used for the compatibility and reusability (Danyu and Hongfeng, 2007). Container logistics plays a vital role in logistics management.

This study addresses to improve the logistics information like unreasonable usage of equipments and also improve the reliability. For that the Topology structure is followed in the basics of EBXML. All the goods details are collected and maintained in the database. The web base application is used to monitor the vehicle and the information is sent to the concerned persons (Ming *et al*., 2008).

This study explains about how the ultra high frequency band RFID which is used for consumer goods in logistics and also the ray prediction technique. In this system the UHF RFID band frequency is placed in receiving area of consumer goods and warehouse, when the goods are unloaded the UHF band frequency senses and the wave prediction will be shown with simulation results. This simulation result shows that the vehicle reaches to particular warehouse (Ying, 2011). For vehicle monitoring system the global positioning system is used.

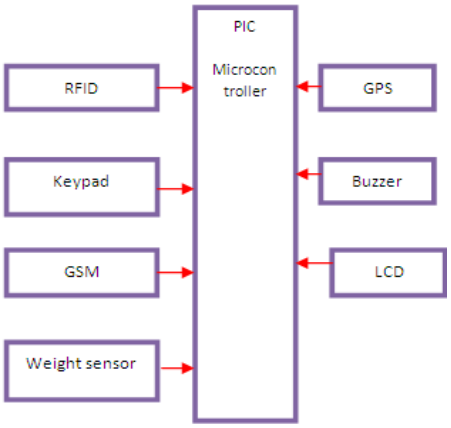

Fig. 1: Prototype design

The GPS system will send the vehicle details continuously. Sometimes the GPS cannot send the location of vehicle continuously. To overcome this LBS system is used which is based on BREW platform and it has value added service likes self positioning, city guides, logistics system. From this, the user can have access to the process in fast and can avail accurate location map service (Xilong and Yingchun, 2009). The high speed GPS vehicle monitoring system paper explains that communication payload is high in GPS. To reduce that the UDP protocol is used and by optimizing the database design, the high occurrence is obtained. First the location is updated by the UDP protocol. Database regarding the vehicle location is maintained automatically (Dan Liu *et al*., 2010).

RFID GSM and GPS based logistic vehicle load balancing and tracking mechanism is demonstrated by (Prasanna and Hemalatha, 2011), where RFID is used to find out the misplacement of goods while unloading. But this work did not address the problem of misplacement of goods while unloading. In the proposed system, all these issues are considered and a multilevel technology is adopted which results in greater efficiency and is an ultimate solution to solve all the problems which is reliable and economic.

SYSTEM ARCHITECTURE

The secure logistic management system consists of number of actions that has to be performed which ensures the security of the goods. Figure 1 shows the schematic of

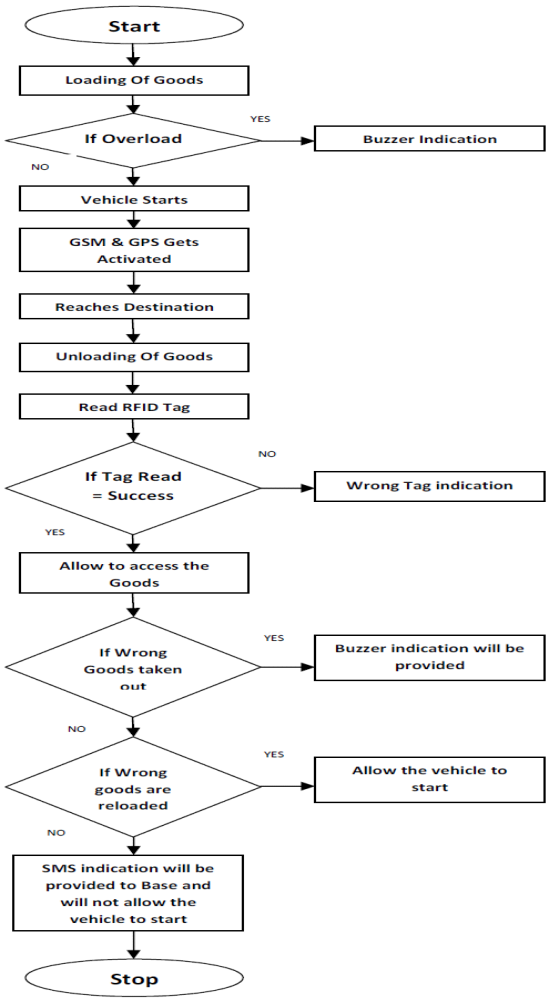

Fig. 2: Workflow of overall system

proposed system architecture. This system includes Weight sensor, which is an analog device interfaced with Pin 1 of Port A, which is an analog to digital convertor port. Load cell is the type of weight sensor used in this system. RFID is interfaced with the microcontroller which is responsible for the goods validation. GSM is a communication device used for transmission of information and is interfaced with the controller through UART communication. Relay is used for interfacing GSM, GPS and RFID with microcontroller.

GPS is used to gather location details and send the received location details to the controller through RS-232 standard. After loading of goods is completed the system will check for the overload condition, if the vehicle is overloaded the load cell will provide an analog value greater than the threshold value which is to indicate the microcontroller that the vehicle is overloaded. Once the microcontroller senses that the vehicle is overloaded it will indicate the driver by providing a buzzer which is also interfaced with the PIC microcontroller.

PIC16F877A series microcontroller used in this system has RISC architecture with inbuilt 8 channel ADC, to which the load cell is interfaced. Load cell is responsible for finding out the vehicles load status, if load is found to be abnormal the system will not allow the vehicle to move. If the load is found to be normal, vehicle is allowed to move. After reaching the destination, the vehicle system will activate the RFID module. Once the user starts to take the goods out, it will start reading all the tags which are placed in each goods and initiate the validation process. If the user attempts to access the irrelevant goods, a buzzer indication will be provided and a timer will be initiated, if wrongly accessed goods are not reloaded into the vehicle an SMS will be sent to the base station along with the location of vehicle details indicating that the user has unloaded the wrong goods.

Until the misplaced goods are reloaded into the vehicle the system will not allow the vehicle to move. At the same time user can trace the vehicle by using SMS

Table 1: Technical aspects

Item name	Item description
RFID reader	RFID reader with 125 khz frequency and operating voltage with 5v
RFID tag	Passive RFID tag is used because there is no need for external resources and also the cost wise it is cheaper than active tag
Weight sensor	Weight sensor has 4 terminals in those 2 terminals for analog output and 1 for positive and 1 for negative
GSM	SIM 300 type GSM is integrated with TCP/IP protocol and operating voltage is 5v, with power saving mode, 2 serial ports, two audio. SIM300 is tri-band EGSM900, DCS1800, PCS 1900 channels and easily configured with AT commands
GPS	634R type GPS has tracking speed of 161 of DBM operating voltage of 3.6-6v, totally 65 channels to track the satellite simultaneously and two serial interfaces UART and RS-232
LCD	16x2 LCD is used for displaying the key number which is pressed by the user on the keypad
Keypad	4X3 Keypad is being used to send the commands to the microcontroller

command which will activate the GPS module and gather the location details and an acknowledgement SMS will be sent to the user along with the vehicle details and also the vehicle location details.

SIM300 type GSM modem is used in this system. AT commands are used for GSM modem for communication and sending SMS. "AT+CMGS" is the command used to send SMS to a particular user. When the GSM receives any message means the system will get switched to the GSM mode using relay. When the user presses a button control provided near the vehicle door the vehicle system will switch itself to RFID mode.

Normally the GPS will be in receiving mode, it will gather the information like latitude and longitude. If microcontroller needs the information, it will switch the system to GPS mode and collects the gathered information. It again switches the system to the GSM mode and starts sending the collected details to the base station or the requested user. Table 1 shows the technical aspects of proposed system.

Flow diagram (Fig. 2):

Step 1: Loading the goods in the vehicle
Step 2: If overloaded, BUZZER indication ON
Step 3: Vehicle starts to move from source to destination
Step 4: GPS starts getting location and sends the latitude longitude details on REQUEST
Step 5: When the vehicle reaches destination the unloading of goods take place
Step 6: Read RFID tag, validation of tag takes place
Step 7: If success, user is allowed to access the goods. If not SMS based indication will be provided
Step 8: GSM will indicate the unloading details of goods on regular intervals
Step 9: The misplacement of the goods is indicated with the help of a BUZZER
Step 10: If misplaced goods are not reloaded into the vehicle, SMS will be sent to the base station and will not allow the vehicle to move

RESULTS AND EXPERIMENTS

Figure 3, 4 and 5 shows the overall circuitry of the secure logistic management system.

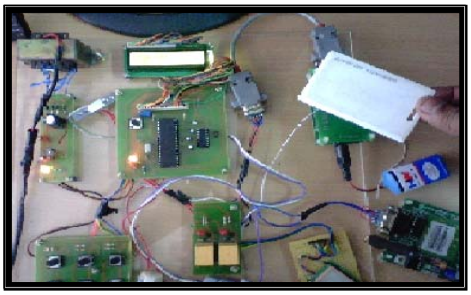

Fig. 3: Prototype of logistics management system

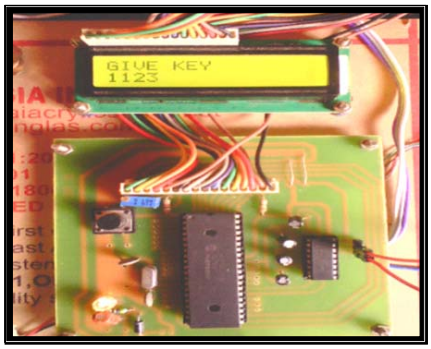

Fig. 4: Password entry module

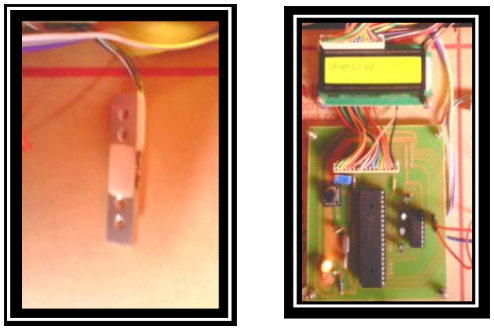

Fig. 5: Load cell interface

CONCLUSION AND FUTURE SCOPE

This secure logistic management system proves to be very effective in providing security for the goods and also ensures the safety and delivery of goods to respective enterprises. Tracking of vehicle is also effectively done

using GPS and GSM technologies.In future drunk and drive may be prevented by embedding alcoholic sensor with the existing structures. Temperature sensor can also be interfaced for thermo sensitive goods.

REFERENCES

Cai-congwu, Xiu-wan, ceien', H. liz, Z. Zhong and T. Wu'jying-chun, 2004. Design and development of farm vehicle monitoring and intelligent dispatching system. Proceedings of the Third international Conference onmachine learning and Cyberneucs, Shanghab, 26-29 August, pp: 352-355.

Dan Liu, Z., Liang, Y. Li and H. Yang, 2010. Research and design of a high performance GPS vehicle monitoring system. Proceedings of the International Conference on Future Information Technology and Management Engineering, (FITME' 2010), pp: 59-61.

Danyu, Z. and G.A.O. Hongfeng, 2007. Design of a communication service system for vehicle monitoring. Proceedings of the IEEE International Conference on Automation and Logistics, August 18-21, Jinan, China, pp: 894-897.

Huiping, L., Z. Yi, T. Iu and W. Chunlin, 2008. Design of a hybrid RFID/GPS-based terminal system in vehicular communications. This work was Supported by the High-Tech Research and Development Program of Henna University, pp: 1-4.

He .W., E. Tan, E.W. Lee, T.Y. Li, 2009. A solution for integrated track and Trace in Supply Chain Based on Rfid and Gps. International Conference of ETFA, pp: 1-6.

Ming, Y., W. Xuefeng and Z. Renyi, 2008. Standardization and Integration of Information System in International Container Logistics, 4th International Conference of WICOM, pp: 1-4.

Prasanna, K.R. and M. Hemalatha, 2011. RFID GSM and GPS based logistics vehicle load balancing and tracking mechanism. Proceedings of the 2011 International Conference on Communication Technology and System Design, (CTSD' 2011), pp: 746-749.

Xilong, Q. and L. Yingchun, 2009. The LBS system based on BREW platform. Proceedings of the 2009 International Conference on Environmental Science and Information Application Technology, (ESIAT' 2009), pp: 689-691.

Ying WEI, 2011. Logistic Unified Information System Warehousing Module Design Based on Internet of Things International Conferece of Communication Software Network, pp: 263-266.

Chengxin, Y., C. Mingwen, C. Mingzhili and S.L. Shaolin, 2007. Study and Prospect on Integrated Multi-technology in Logistics, Proceedings of the IEEEInternational Conference on Automation and LogisticsAugust 18-21, Jinan, China, pp: 871-875.