Research Journal of Applied Sciences, Engineering and Technology 4(15): 2316-2322, 2012
ISSN: 2040-7467

Submitted: December 06, 2011 Accepted: January 04, 2012 Published: August 01, 2012

Adaptive Critic Based Neuro-Fuzzy Tracker for Improving Conversion Efficiency in PV Solar Cells

Halimeh Rashidi, Saeed Niazi and Jamshid Khorshidi
Mechanical Engineering Department, Hormozgan University, Iran

Abstract: The output power of photovoltaic systems is directly related to the amount of solar energy collected by the system and it is therefore necessary to track the sun's position with high accuracy. This study proposes multi-agent adaptive critic based nero fuzzy solar tracking system dedicated to PV panels. The proposed tracker ensures the optimal conversion of solar energy into electricity by properly adjusting the PV panels according to the position of the sun. To evaluate the usefulness of the proposed method, some computer simulations are performed and compared with fuzzy PD controller. Obtained results show the proposed control strategy is very robust, flexible and could be used to get the desired performance levels. The response time is also very fast. Simulation results that have been compared with fuzzy PD controller show that our method has the better control performance than fuzzy PD controller.

Keywords: Agent critic, fuzzy logic, neural network, PMDC motor, PV solar cell, solar tracker system

INTRODUCTION

The emerging concern about environment pollution and the constantly reduction in available sources of fossil fuels along with the continuous increase in energy consumption have forced us exploring alternative energy sources for the production of electrical power. The main clean, silent and renewable alternative energy source which can be converted to electrical power is solar energy (Chong and Wong, 2009). The sun is infinite and can stand to earth about 1000 times as much energy of the world's energy consumption (Usta *et al.*, 2011), therefore, it received great interest during last decades. The concept of converting solar energy into electrical power which is called PV conversion is introduced long back; however, the performance improvement of this PV conversion is still one of the main research activities (Ozuna *et al.*, 2011). A PV panel consists of a flat surface including numbers of p-n junctions connected together. The output power of PV systems depends on amount of solar energy captured by collector (Georgiev *et al.*, 2004). The daily variation of solar radiation is the most important problems in solar energy moreover; direct usage of solar energy is limited with sunny hours and is not continuous. Therefore, the utilization of solar energy has the limitation of practicality due to high cost and low efficiency (Abdallah and Nijmeh, 2004). To overcome these problems, many different methods have been proposed in the literature about effectively practical methods of solar energy (Alata *et al.*, 2005). One of the most effective methods is solar tracking system.

In this method, the direction of solar panel changes according to sunlight position during the course of a day (Bairi, 1990). Many solar tracking systems are designed in the literature with the aim to utilize a high rate from solar radiation, including: PID control with a tuning rule (Xiao *et al*., 2011), Linear Quadratic control (LQ) (Alexandru and Pozna, 2010), Adaptive control (Tatu and Alexandru, 2011), Sliding Mode Control (Brea *et al.*, 2010), fuzzy control (Al-Nabulsi *et al*., 2011), neural network control (Bahgat *et al*., 2005) and DTC control (Mokhtari *et al.*, 2009), etc. A former comprehensive survey and also control strategies developed for solar tracking systems can be found in (Chia *et al.*, 2009). Although several intelligent and classical control strategies have been designed for solar tracking systems, as mentioned earlier, but none of them provide all goals such as accurate set point tracking and disturbance rejection. This study focuses on solving these complex control problems via adaptive critic based neurofuzzy controller that may improve transient responses, rejection of disturbance and robustness compared to other control methodologies such as Conventional PD and fuzzy PD controllers. During the past few years biologically motivated intelligent computing has been successfully employed for solving different types of problems. Based on successful implementation of this model for decision making and controlling of uncertain nonlinear systems, delayed systems, simple linear systems, as well as more complex nonlinear systems, this study concentrates on designing of an adaptive critic-based neurofuzzy controller for the sun tracking system.

Corresponding Author: Halimeh Rashidi, Mechanical Engineering Department, Hormozgan University, Bandar-Abbas, Iran

SOLAR TRACKING SYSTEM

Automatic solar tracking system can improve the conversion efficiency of PV panel by trapping more energy from sun. To obtain the maximum output power from the solar cell panel, auto tracking mechanism has to ensure that sunlight is always perpendicular to the surface of the solar cell panel. As shown in Fig. 1, proposed solar tracking system is a double axes tracker consisting of two Permanent Magnet Dc Motors (PMDC) and five Light Dependent Resistors (LDR). Motor 1 moves the solar panel about the horizontal North- South axis to adjust the slope of the surface and motor 2 do the same about the vertical East-West axis to adjust the azimuth angle of the panel. LDR1 and LDR2 are used to track the horizontal position of sun while LDR3 and LDR4 are for tracking vertical position of sun. LDR5 is a pyrometer which does discriminate between day and night by detecting solar radiation, thereby, controlling other four LDRs (motor 1 and 2 search for optimal location of PV panels only during day time i.e. when status of LDR5 is on).

As depicted in Fig. 2, when the received lights by LDR1 and 2 are different, their resistance and accordingly, their voltage drop will be different and it is a sign that the PV panel is not aligned properly and needs to be moved in North- South direction. The output signals from LDR1, 2 and 5 are fed to proposed control system which controls motor 1. Motor 1 moves the PV panel in North- South direction till voltage difference between LDR1 and 2 reaches zero. The same concept is valid for motor 2 using LDR3, 4 and 5 signals for moving PV panel in East-West direction.

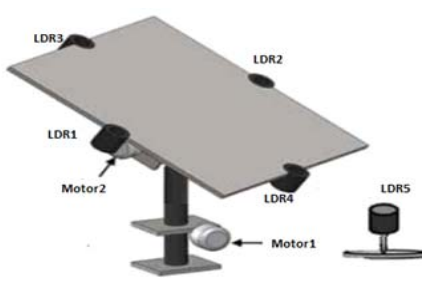

Fig. 1: Schematic of solar tracker sensor

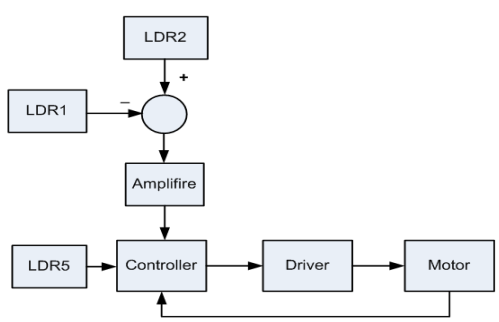

Fig. 2: Structure of solar tracking system for one direction

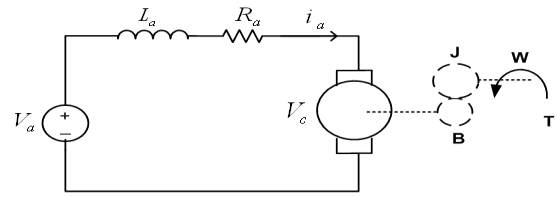

Fig. 3: Equations describing the dynamic behavior of PMDC motors

Mathematical model of permanent magnet DC motor: Among all different kinds of electric motors, the PMDC motors have become the subject of a large body of research in the field of electric motor drives. This is partly because the motor has an intrinsically simple and rugged structure and low manufacturing cost (Reda and Andreas, 2004). Moreover, induction motor drives have the wide speed range, high efficiencies and robustness. This servo drive system is essential in many applications such as robotics, actuation, numerically controlled machinery and guided manipulation where precise control is required. All these merits make the motor a good candidate for the industrial applications. Induction machine servo drive system is considered high-performance when the rotor position, rotor speed and stator currents can be controlled to follow a reference for tracking at all times (Al-Mohamad, 2004). A track is a desired time history of the motor current, speed or position.

Among all different kinds of electric motors, the PMDC motors have become the subject of a large body of research in the field of electric motor drives. This is partly because the motor has an intrinsically simple and rugged structure and low manufacturing cost (Usta *et al*., 2011). Moreover, PMDC motor has high efficiencies, high torque at low speed range and robustness. Because of the linear speed torque curve of PMDC motors, they are suitable in many applications such as robotics, actuation and numerically controlled machinery and guided manipulation where precise control is required. The equivalent circuit of PMDC motor is shown in Fig. 3. The equations describing the dynamic behavior of PMDC motors are given below:

$$V_a(t) = R_a i_a(t) + L_a \frac{di_a}{dt} + K\omega(t) \tag{1}$$

$$T(t) = J\frac{d\omega(t)}{dt} + \beta\omega(t) + T_1(t) \approx k i_a(t) \tag{2}$$

where, $\omega(t)$ rotational speed, $i_a(t)$ armature circuit current, $T_1(t)$ constant torque-type load, $R_a(t)$ armature circuit resistance β coefficient of viscous- friction, k torque coefficient, J moment of inertia and L_a armature circuit

inductance. Equation (1) and (2) describe the dynamic behavior of the motor.
If we let:

$$x_1(t) = i_a(t),\ x_2(t) = \omega(t),\ u(t) = V_a(t) \text{ and } dt = T_1(t)$$

The state space model of system can be represented by the following:

$$\begin{aligned} \dot{x}(t) &= Ax(t) + Bu(t) + \\ y(t) &= Cx(t) \end{aligned} \tag{3}$$

where,

$$x(t) = \begin{bmatrix} x_1(t) \\ x_2(t) \end{bmatrix} \quad C = [0\ 1],\ E = \begin{bmatrix} 0 \\ -\frac{1}{J} \end{bmatrix} \tag{4}$$

$$A = \begin{bmatrix} -\frac{R_a}{L_a} & -\frac{K}{L_a} \\ -\frac{K}{J} & -\frac{\beta}{J} \end{bmatrix},\ B = \begin{bmatrix} \frac{1}{L_a} \\ 0 \end{bmatrix} \tag{5}$$

The load torque is considered as disturbance input. The numerical values of the model parameters are given as:

β = 0.002N. m sec/rad, R_a = 2.25 Ω, L_a = 46.5 mH
J = 0.7 kg. m^2, K = 1.1V sec/rad

ADAPTIVE CRITIC BASED NEUROFUZZY CONTROLLER

Neurofuzzy controller: A Neuro-Fuzzy controller can be defined as a system that uses a combination of fuzzy logic and neural networks. Two major approaches of trainable neurofuzzy models can be distinguished (Mohagheghi *et al.*, 2009). The network based Takagi-Sugeno fuzzy inference system, which is used here and the locally linear neurofuzzy model. The proposed adaptive neuro-fuzzy controller is a kind of unsupervised learning methods for autonomous agents to acquire action rules to adapt cue of reinforcement reward and punishment (Rashidi and Rashidi, 2006). In this method the teacher of conventional supervised learning is replaced by an intelligent critic that assesses the performance of controller and evaluates the current states of system and generates proper reinforcement signal *r*. The controller should modify its characteristics so that the critic stress *r*
is decreased. In the absence of an exact evaluation of the present state in term of the objective value function, reinforcement cues like stress, satisfaction and etc. can be

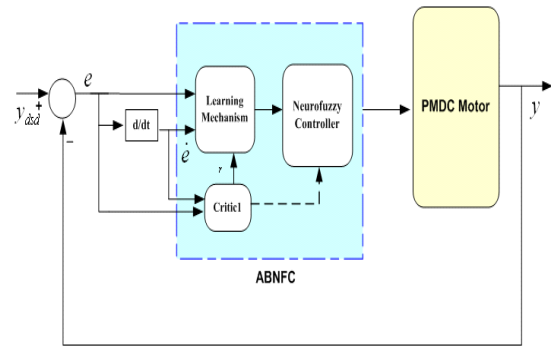

Fig. 4: Structure of the proposed adaptive neuro fuzzy controller

guide our control action into changing in the right direction so as to produce desired response. Similarly, the critic evaluates the state of system and generates a signal called reinforcement signal *r*. This signal is used to train and fine tune the main controller. Basically this critic acts as intelligent guide for the controller. The learning mechanism will be adapted the controller in order to satisfy critic and reduce its stress. This is a key idea of the proposed method in its using at the control systems. The structure of the proposed adaptive neuro fuzzy controller is illustrated in Fig. 4. The mathematical description of this method is as follows:

The Takagi-Sugeno fuzzy inference system is based on fuzzy rules of the following type:

$$\text{Rule}_i\text{: If } u_1 = A_{i1} \text{ And ...And } u_p = A_{ip} \quad \textit{then } y = f_i(u_1, u_2, ..., u_p) \tag{6}$$

where i = 1…M and *M* is the number of fuzzy rules. $u_1,...,u_p$ are the inputs of network, each A_{ij} denotes the fuzzy set for input u_j in rule *i* and f_i (.) is a crisp function which is defined as a linear combination of inputs in most applications:

$$y = \omega_{i0} + \omega_{i1}u_1 + \omega_{i2}u_2 + ... + \omega_{ip}u_p \tag{7}$$

Matrix form $y = a^T(\underline{u}).W$
Thus the output of this model can be calculated by:

$$y = \frac{\sum_{i=1}^{M} f_i(\underline{u})\mu_i(\underline{u})}{\sum_{i=1}^{M} \mu_i(\underline{u})} \quad \mu_i(\underline{u}) = \prod_{j=1}^{p} \mu_{ij}(u_j) \tag{8}$$

where, $\mu_{ij}(u_j)$ is the membership function of *jth* input in the *ith* rule and $\mu_i(u)$ is the degree of validity of the *ith* rule. A simple form of $f_i(\underline{u})$ can be as:

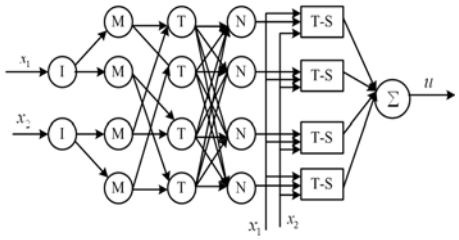

Fig. 5: A neuro fuzzy system equivalent with a MISO TSK fuzzy inference system

$$f_i(\underline{u}) = a_i u_1 + b_i u_2 + c_i \tag{9}$$

The output of controller is in the following form:

$$y = \frac{\sum_{i=1}^{M} \mu_i(\underline{u})(a_i u_1 + b_i u_2 + c_i)}{\sum_{i=1}^{M} \mu_i(\underline{u})} \tag{10}$$

where M is number of controller fuzzy rules, u_1 and u_2 are the controller inputs. a_i, b_i and c_i are the neurofuzzy controller parameters which will be updated via the learning mechanism for achieving predefined criteria and goals.

In this study we choose u_1 = e (position error) and $u_2 = \dot{e}$ (position error derivative). As mentioned above, the neurofuzzy controller applied here, is a standard Sugeno fuzzy controller composed of six layers. Figure 5 shows a sample neurofuzzy system with two-input and one-output TSK fuzzy inference system. The node functions in same layer are of the same function family as described as follows.

The task of the first layer is the assignment of inputs' scaling factors in order to map them to the range of [-1, +1]. Each nod in the second layer, specifies the degree to which the given input u_1 and u_2 satisfies the linguistic labels. Third layer nodes multiply the incoming signals and constitute the antecedent parts of fuzzy rules, $\prod_{j=1}^{p} \mu A_{ij}(x_j)$. Each node in the forth layer calculates the ratio of corresponding firing strength to the sum of all rules firing strengths, hence the term $\frac{\mu_i}{\sum_{i=1}^{M} \mu_i}$.

The nodes function of the fifth layer is performing a linear combination of input variables plus a constant value, thus calculating the corresponding rule's consequent part y. Finally defuzzification is carried out in the sixth layer in order to calculate the proper control signal according to Eq. (10). Figure 6 shows the membership function of the inputs linguistic variables. If the speed error is high but its derivative shows a decreasing trend then the performance

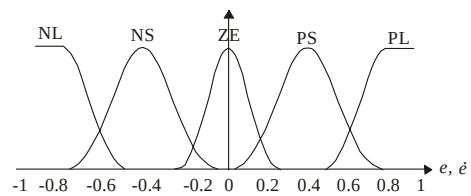

Fig. 6: The membership function of the corresponding linguistic variables for error and its derivative

Table 1: Rule base and fuzzy sets of the critic

e / $\dot{e}$	NL	NS	ZE	PS	PL
PL	ZE	PS	PM	PL	PL
PS	NS	ZE	PS	PM	PL
ZE	NM	NS	ZE	PS	PM
NS	NL	NM	NS	ZE	PS
NL	NL	NL	NM	NS	ZE

PL: Positive Large; PM: Positive Medium; PS: Positive Small; ZE: Zero NS: Negative Small; NM: Negative medium; NL: Negative large

is not too bad and we can hope to have a better performance if we carry on. Also, if the speed error is low but its derivative has a large positive value, the critic should not be satisfied with the behavior. On the basis of these linguistic descriptions, we designed a fuzzy critic with fuzzy sets and rules base shown in Table 1.

Critic agent: The most important block in Fig. 4 is the critic. Critic agent assesses the controller performance through evaluation of plant output and provides appropriate reinforcement signal, namely r. This signal is allowed to have a real value in [-1,+1] range and shows the performance of the system. If this signal becomes zero, it means that the critic is satisfied by the performance of the controller from its own point of view. If the signal becomes larger, it shows the more stress and more dissatisfaction. The signal produced, contributes collaboratively for updating parameters of the neurofuzzy controller. Basically, the critic acts as intelligent guide for the controller. The learning mechanism will adapt the controller parameters in order to satisfy the critic and reduce its stresses. Here the critic is defined in fuzzy form. Fuzzy systems are very useful for critic modeling because the critic just gives us an approximate evaluation of current states of system.

Learning mechanism: The main purpose in the adaptive neurofuzzy based intelligent controller is to optimization an energy function. This aim can be extracted trough bellow energy function:

$$E = \frac{1}{2} r^2 \tag{11}$$

where, r is the reinforcement signal. By minimizing this energy function, we can reduce the total stress of the system and satisfy all critics. With applying Newton

gradient decent method the changes in weight must be followed by bellow general rule:

$$\Delta \omega_i = -\eta \frac{\partial E}{\partial \omega_i} \tag{12}$$

where η is the learning rate of the neurofuzzy controller. The right hand side of (12) can be calculated by chain rule:

$$\frac{\partial E}{\partial \omega_i} = \frac{\partial E}{\partial r} \cdot \frac{\partial r}{\partial y} \cdot \frac{\partial y}{\partial u} \cdot \frac{\partial u}{\partial \omega} \tag{13}$$

The term $\frac{\partial y}{\partial u}$ is the gradient of the system and shows the long term variations of the plant output to the control signal. As in most cases, the system is designed in such a way that this variation is a positive constant, the sign of this value, i.e., positive is sufficient for adaptation rule. In most cases the remaining part $\frac{\partial r}{\partial y}$ can be approximated via simplifying assumptions. If, for example error is defined by:

$$e = y_{ref} - y \tag{14}$$

where y_{ref} is the desired output (reference input), then

$$\frac{\partial r}{\partial y} = -\frac{\partial r}{\partial e} \tag{15}$$

Since with the increasing or decreasing of the error, reinforcement signal r will be also incremented or decremented respectively and on the other hand, online calculation of $\frac{\partial r}{\partial e}$ is accompanied with measurement error, thus it can be replaced by its sign, -1, in (15). Using (12) and (15), adaptation rule of the tunable parameter will be as follows:

$$\Delta \omega_i = \eta r \cdot \frac{\partial u}{\partial \omega_i} \tag{16}$$

Hence, in according to (16) the update rules for the parameters of the neurofuzzy controller will be given as (17):

$$\begin{aligned} \Delta a_i &= \eta r e \frac{u_i}{\sum_{i=1}^{M} u_i} \\ \Delta b_i &= \eta r \dot{e} \frac{u_i}{\sum_{i=1}^{M} u_i} \\ \Delta c_i &= \eta r \frac{u_i}{\sum_{i=1}^{M} u_i} \end{aligned} \tag{17}$$

In general, the performance of the algorithm is very sensitive to the proper setting of the learning rate. If the learning rate is set too high, the algorithm may oscillate and become unstable. If the learning rate is too small, the algorithm will take too long to converge. It is not practical to determine the optimal setting for the learning rate before training and, in fact, the optimal learning rate changes during the training process, as the algorithm moves across the performance surface. The performance of the algorithm can be improved if we allow the learning rate to change during the training process. An adaptive learning rate will attempt to keep the learning step size as large as possible while keeping learning stable. In this study we consider an exponential learning rate as, $\eta = \gamma_0 e^{-\gamma_1 t} + \gamma_2$ where t is time and γ_0,γ_1 and γ_2 are constant. In this case γ_0,γ_1 and γ_2 are chosen by trial and error as 0.8, 6 and 0.43, respectively.

SIMULATION RESULTS

Solar tracking system has been simulated in Matlab/ Simulink software considering conventional PD, Fuzzy PD and Adaptive Critic Based Neurofuzzy Controller (ACBNFC). Related simulation results have been shown in Fig. 7 and 8. Outputs of the system have been plotted on the same graph as shown in Fig. 7 for the PMDC motor. From this figure, it is observed that proposed controller gives faster response and less overshoot in compare with other two controllers.

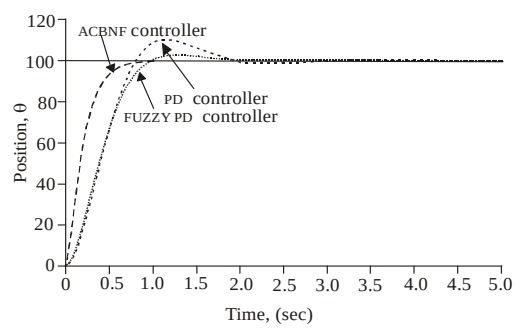

Fig. 7: The output of the system for PD, Fuzzy PD and ACBNFC controllers

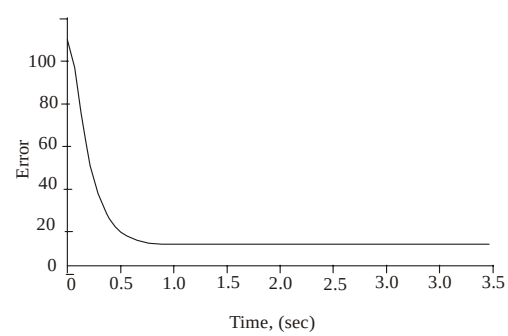

Fig. 8: The change of the error in fixed reference input for ACBNF controller

Table 2: Transient performance indices of the MACNFC and PID controller

	Overshoot (%)	Rise-time (sec)	Settling-time (sec)	S-S error (%)
MACNFC	0.0	0.43	0.85	0.0
Fuzzy PD	4.0	0.75	1.95	0.0
PD	11.0	0.70	2.55	0.0

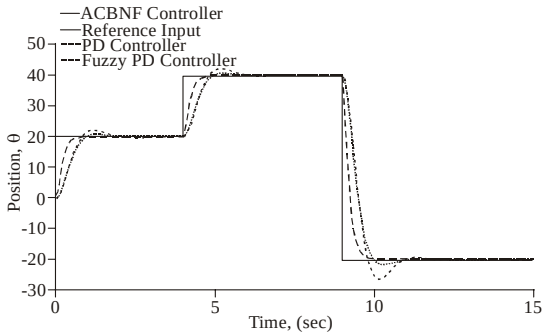

Fig. 9: The outputs of the system from all controllers for variable angular position

The transient performance indices of the time response of the system with three controllers are also outlined in Table 2. As can be seen, although all of controllers perform well, but the performance of ACBNF controller is much better in terms of rise-time, settling-time and overshoot.

The change of the error in fixed reference input for ACBNF controller has been shown in Fig. 8 for PMDC motor. It can be observed that the error is quickly decaying to zero and the motor can accurately track the sun position.

To further evaluate the performance of the proposed controller, a variable angular position has been applied to the system and system responses have been shown in Fig. 9 for all three controllers. From this figure it is observed that the proposed controller has better performance, faster response during transient period and lower steady state error.

CONCLUSION

In this study, an agent adaptive critic based neurofuzzy tracker for improving conversion efficiency in PV solar cells problem was investigated. The control framework consisted of a critic and a neurofuzzy controller whose parameters were adapted online according to reinforcement signals provided by critic with the back-propagation of error algorithm. The task of critic was to assess the present situation resulted from the applied control action in terms of satisfactory achievement of the control goals and provided the reinforcement signal. The efficiency and the robustness of the proposed method against set-point tracking were shown by simulation results. The advantages of the controller such as Online learning, fast convergence, robustness and relative independency to plant model makes it possible to use this controller in different type of engines.

REFERENCES

Abdallah, S. and S. Nijmeh, 2004. Two axes sun tracking system with PLC control. Energy Conv. Manage., 45(11-12): 1931-1939.

Alata, M., M.A. Al-Nimr and Y. Qaroush, 2005. Developing a multipurpose sun tracking system using fuzzy control. Energ. Conv. Manage., 46(7-8): 1229-1245.

Alexandru, C. and C. Pozna, 2010. Simulation of a dual-axis solar tracker for improving the performance of a photovoltaic panel. J. Power Energ., 224(6): 797-811.

Al-Mohamad, A., 2004. Efficiency improvements of photovoltaic panels using a sun tracking system. Appl. Energ. J., 79(3): 345-354.

Al-Nabulsi, A., R. Dhaouadi and H.U. Rehman, 2011. Single input Fuzzy Controller (SFLC) based maximum power point tracking. IEEE ICMSAO, 2(1): 1-5.

Bahgat, B.G., N.H. Helwa, G.E. Ahmad and E.T. El Shenawy, 2005. Maximum power point tracking controller for PV systems using neural networks. Renewable Energ. J., 30(8): 1257-1268.

Bairi, A., 1990. Method of quick determination of the angle of slope and the orientation of solar collectors without a sun tracking system. Solar Wind Technol., 7(2-3): 327-330.

Brea, E.A.J., E.I. Ortiz, A.L. Salazar and J.L. Gonzalez, 2010. Simple photovoltaic solar cell dynamic sliding mode controlled maximum power point tracker for battery charging applications. IEEE APEC, 1(1): 666-671.

Chia, Y.L., P.C. Chou, C.M. Chiang and C.F. Lin, 2009. Sun tracking systems: A Review. Sensors J., 9: 3875-3890.

Chong, K.K. and C.W. Wong, 2009. General formula for on-axis sun tracking system and its application in improving tracking accuracy of solar collector. Solar Energ., 83(3): 298-305.

Georgiev, A., P. Roth and A. Olivares, 2004. Sun following system adjustment at the UTFSM. Energ. Conv. Manage., 45(11-12): 1795-1806.

Mohagheghi, S., G.K. Venayagamoorthy, S. Rajagopalan and R.G. Harley, 2009. Hardware implementation of a Mamdani based fuzzy logic controller for a static compensator in a multimachine power system. IEEE T. Indus. Appl., 45(4): 1535-1544.

Mokhtari, B., A. Ameur, L. Mokrani, B. Azoui and M.F. Benkhoris, 2009. DTC applied to optimize solar panel efficiency. IEEE IECON, 2(1): 1122-1127.

Ozuna, G., C. Anaya, D. Figueroa and N. Pitalua, 2011. Solar tracker of two degrees of freedom for photovoltaic solar cell using fuzzy logic. World Congress Eng., 2(1): 230-233.

Rashidi, M. and F. Rashidi, 2006. Multi agent adaptive critic based Neuro-fuzzy controller for multi-objective nonlinear systems. WSEAS T. Syst., 5(3): 572-578.

Reda, I. and A. Andreas, 2004. Solar position algorithm for solar radiation applications. Sol. Energ., 76: 577-589.

Tatu, N.I. and C. Alexandru, 2011. Designing the tracking system for a string of photovoltaic modules. Int. Conf. Optim. Robots Manipulat., 2(1): 345-250.

Usta, M.A., O. Akyazi and H. Altas, 2011. Design and Performance of Solar Tracking System with Fuzzy Logic. 6th Int. Advanced Tech. Symp., pp: 331-336.

Xiao, J.M., L.Y. Jiao, H.M. Zhu and F.K. Xiao, 2011. Application research of CMAC-PID control in photovoltaic tracking system. Adv. Mater. Res., 383-390: 687-691.