Research Journal of Applied Sciences, Engineering and Technology 4(16): 2760-2764, 2012
ISSN: 2040-7467

Submitted: March 26, 2012 Accepted: April 17, 2012 Published: August 15, 2012

Experimental Research on Effects of Nozzle Geometrical Structure on Liquid-Vapor Ejector using Aqueous LiBr Solution as Primary Fluid

Hongtao Gao and Rui Wang
Institute of Refrigeration and Cryogenics Engineering, Dalian Maritime University, Dalian, 116026, China

Abstract: From the standpoint of offering reference for its optimal design, liquid-gas ejector is applied to lithium bromide absorption refrigerator in order to improve mass transfer efficiency. Many nozzles with different geometrical structures are adopted and experimental research is conducted to investigate the influence of physical dimension on performance of ejector. By comparison between convergent-divergent nozzle and convergent nozzle, the results show that, the reason for the influence on cooling capacity is different. With convergent-divergent nozzle, the cooling capacity increases with the decrease of throat diameter. With convergent nozzle, the tendency is on the contrary. With the same minimum cross area, the cooling capacity with convergent-divergent nozzle is better than that with convergent nozzle.

Keywords: Absorption refrigeration, experimental research, lithium bromide, nozzle

INTRODUCTION

Lithium bromide absorption refrigeration is widely applied because it utilizes low quality energy and its refrigerant is environmental. Absorber has an important effect on the size of the lithium bromide absorption chiller and gets wide attention of scholars both at home and abroad on its performance of heat and mass transfer. A number of experimental studies on the absorption of vapor to the liquid film have been published recently. They include the study by Fujita and Hihara (2005) Medrano *et al*. (2002), Kyung *et al*. (2007a, b), Kim *et al*. (1995) and Takamatsu *et al*. (2009) for a horizontal or vertical tube. Many analytical studies on the falling-film absorption process have been carried out. Kyung *et al*. (2007a, b) built a model to forecast the absorbability and the simulated results were consistent with experimental results. Yoon *et al*. (2005) built a model of simultaneous heat and mass transfer process in absorption of refrigerant vapor into a lithium bromide solution of water-cooled vertical plate absorber. Islam *et al*. (2009) numerically investigated the absorption in falling film of LiBr aqueous solution with solitary waves. The simulation result was compared with the smooth film and showed that wavy film provides higher absorption rate than that of smooth film. The ejector was used in the absorption refrigeration by some scholars. Sun *et al*. (1996) proposed a refrigeration cycle based on the combination of an absorption cycle with an ejector refrigeration cycle. High-pressure vapor form generator injects part of the vapor out form evaporator. Eames and Wu (2000) proposed a novel cycle which uses a steam ejector to enhance the concentration process by compressing the vapor from the lithium bromide solution to a state that it can be used to re-heat the solution from which it came. The theoretical results show that the coefficient of performance of the novel cycle is better than the conventional single-effect absorption cycle.

In this study, traditional absorber is substituted by liquid-gas ejector and a heat exchanger in lithium bromide absorption refrigerator to improve the mass transfer efficiency. In other words, lithium bromide solution is used to suck vapor in order to promote miniaturization and efficiency improvement of lithium bromide absorption refrigerator. The object of this study is to investigate the effects of nozzle with different structure and size on performance of liquid-gas ejector.

EXPERIMENTAL FACILITIES

The main components of the experiment set-up shown in Fig. 1 are an absorber, a generator, a condenser, an evaporator and control and measurement devices.

The absorption refrigeration system in this study is based on single-effect absorption refrigeration cycle. The ejector-type absorber consists of an ejector and a heat exchanger. The ejector includes a Nozzle (N), a Mixing chamber (M) and a Diffuser (D). The density and temperature of the inlet and outlet solutions can be measured by the mass flow meter. The concentrations of

Corresponding Author: Hongtao Gao, Institute of Refrigeration and Cryogenics Engineering, Dalian Maritime University, Dalian, 116026, China

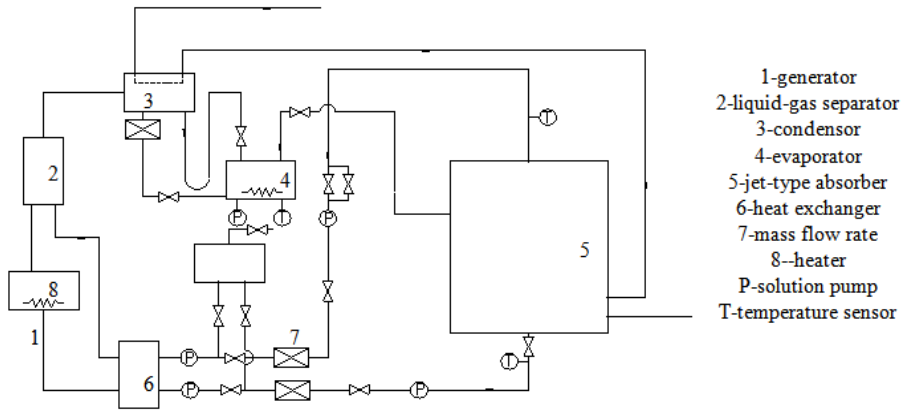

Fig. 1: Schematic Diagram of Experimental Table

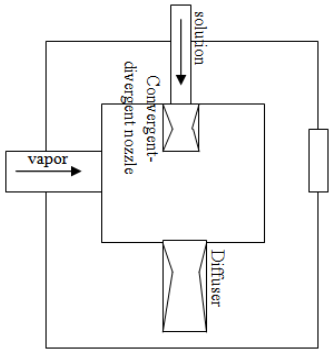

Fig. 2: Schematic diagram of ejector with convergent-divergent nozzle

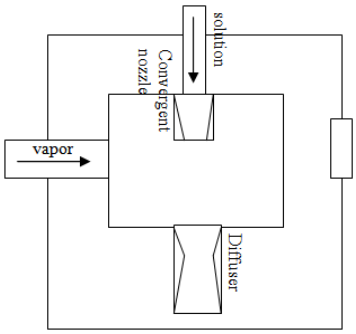

Fig. 3: Schematic diagram of ejector with convergent nozzle

inlet and outlet solutions are determined, applying the water-LiBr density correlation as a function of temperature and concentration.

An evacuated housing, made by stainless steel, is designed to keep vacuum for the ejector inside. For observing the flow pattern of lithium bromide solution, four windows are set on the wall of evacuated housing. Figure 2 and 3 show the schematic diagrams of ejectors with different nozzles. Lithium bromide aqueous solution arrives at mixing chamber with lower pressure after accelerated by nozzle. By the low pressure, vapor is induced into mixing chamber to mix with solution. The pressure of weak solution is improved by diffuser.

Table 1: Accuracy of equipments

Measurement devices	Accuracy
PT100	±0.03ºC
Pressure sensor	0.01%
Densitometer	±0.01 g/cm^3
Flow meter	±0.1%

Table 2: Experiment conditions

Experiment conditions	Parameters
Convergent-divergent nozzle	Throat diameter 1.5, 2.0, 2.5 mm, respectively
Convergent nozzle	Outlet diameter 1.0, 1.5 mm, respectively
Mixing chamber	Diameter 50, 200 mm, respectively
Diffuser	Throat diameter 5, 6, 7 mm, respectively
Temperature of strong solution	18ºC
Concentration of strong solution	50.7 wt%
Flow rate of strong solution	1.2~2.7 kg/min
Evaporator temperature	5ºC
Additive	Without 2EH/2EH (50 mg/kg)
Back pressure of diffuser	500 Pa

Table 1 shows the accuracy of measurement devices and Table 2 shows the experiment conditions.

Data reduction: The heat and mass balance for the absorber are expressed respectively as:

$$h_{Sin}W_{Sin}+h_{Vin}W_{ab}=Q_C+h_{Sout}(W_{Sin}+W_{ab}) \quad (1)$$

$$W_{in}x_{in}=(W_{in}+W_{ab})x_{out} \quad (2)$$

where, h is the enthalpy, W is the mass flow rate, W_{ab} is the mass flow rate of absorbed vapor, x is the mass fraction of LiBr, Q_C is the heat transfer rate. The subscript S and V refer to the solution and vapor, respectively and the subscripts in and out indicate the inlet and outlet of the absorber, respectively.

Fig. 4: Flow pattern of convergent-divergent nozzle (2.5 kg/min)

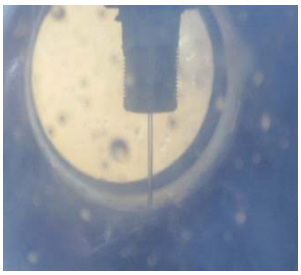

Fig. 5: Flow pattern of divergent nozzle (2.5 kg/min)

EXPERIMENT RESULTS AND ANALYSIS

Flow pattern: Figure 4 shows the flow pattern as the throat diameter of convergent-divergent nozzle is 1.5 mm. In the position near the outlet of nozzle, the solution is conical, while after a small distance, the solution is cylindrical. In experiment, minute bubbles could be observed near the outlet of convergent-divergent nozzle. The bubbles could be more obvious with the increase of flow rate.

Figure 5 shows the flow pattern as the outlet diameter of convergent nozzle is 1.5 mm. The solution is cylindrical without any kinds of bubbles.

Effects of throat diameter of convergent-divergent nozzle on cooling capacity: As the diameter of mixing chamber is 200 mm and throat diameter of diffuser is 5 mm, the influence of the throat diameter of convergent-divergent nozzle (Dt-cd) on cooling capacity was studied at three different diameters of 1.5, 2.0 and 2.5 mm, respectively.

Figure 6 shows how the diameter of convergent-divergent nozzle affects the cooling capacity at five mass flow rates. At the same mass flow rate, the cooling capacity increases with throat diameter of convergent-divergent nozzle decreases. At a mass flow rate of 1.8 kg/min, the cooling capacity has an increase of about 31% for the throat diameter of convergent-divergent nozzle from 2.5 to 1.5 mm, whereas, it has an increase of about 72% when the mass flow rate is 2.7 kg/min. As the mass flow rate is 2.7 kg/min, the cooling capacity of using convergent-divergent nozzle with 2 mm throat diameter is

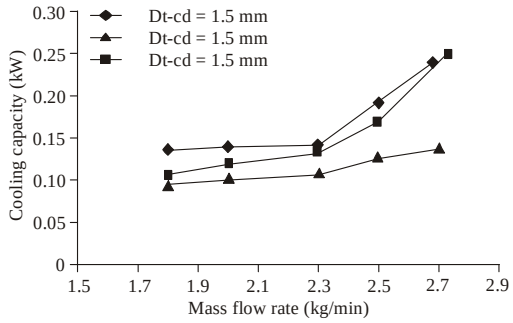

Fig. 6: The influence of throat diameter of convergent-divergent nozzle on cooling capacity

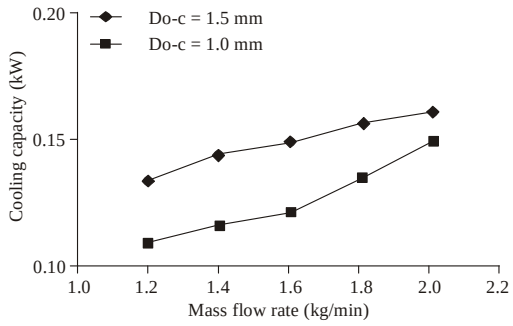

Fig. 7: The influence of outlet diameter of convergent nozzle on cooling capacity

almost the same with that of using convergent-divergent nozzle with 1.5 mm throat diameter.

The reasons are as follows. The velocity of solution increases with the decrease of throat diameter. Meanwhile, the pressure of solution is decreasing. Both factors contribute to the atomization of solution at the outlet of nozzle. Hence, the contact area increases as well as the cooling capacity. With large mass flow rate, the atomization of using nozzle with large throat diameter is not so obvious compared with that of using nozzle with small throat diameter, the contact area increases with the increase of throat diameter because of the improvement in surface area of solution. This tendency is more obvious with large flow rate. As a result, the cooling capacity of using nozzle with 1.5 mm throat diameter is almost the same with that of using nozzle with 2 mm throat diameter.

Effects of throat diameter of convergent nozzle on cooling capacity: Figure 7 shows that the cooling capacity increases as the mass flow rate increases, when the diameter of mixing chamber is 50 mm, throat diameter of diffuser is 6 mm and 2EH of 50 ppm. As the outlet diameter of convergent nozzle (Do-c) is 1 mm, the cooling capacity increases from 0.108 to 0.149 kW with mass flow rate from 1.2 to 2.0 kg/min and the cooling capacity increases from 0.133 to 0.16 kW as the outlet diameter of convergent nozzle is 1.5 mm. Using nozzle which the outlet diameter is 1.5 mm, the cooling capacity

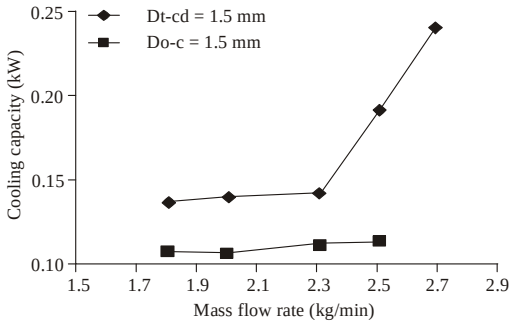

Fig. 8: The influence of type of nozzle on cooling capacity

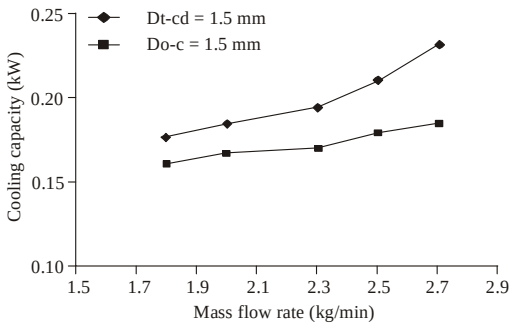

Fig. 9: The influence of type of nozzle on cooling capacity

has 18.7% average increase compared with using nozzle which the outlet diameter is 1 mm.

For convergent nozzle, the cooling capacity increases with the improvement of outlet diameter. This increase in cooling capacity is caused that the contact area is determined by the outlet diameter of nozzle. Hence, the larger the outlet diameter is, the higher the cooling capacity could be.

Comparison between convergent-divergent nozzle and convergent nozzle: When the diameter of mixing chamber is 200 mm and throat diameter of diffuser is 5 mm, the effects of type of nozzle on cooling capacity are investigated. Figure 8 shows the cooling capacity increases with using the convergent-divergent nozzle at the same mass flow rate. At a mass flow rate of 1.8 kg/min, the cooling capacity increase of about 26% is observed as the convergent-divergent is used, whereas the cooling capacity has an increase of about 69% when the mass flow rate is 2.5 kg/min.

When the diameter of mixing chamber is 50 mm and throat diameter of diffuser is 7 mm, the effects of type of nozzle on cooling capacity are investigated. The results are shown in Fig. 9. The cooling capacity increases with the improvement of mass flow rate from 1.2 to 2.7 kg/min. For convergent nozzle with 1.5 mm outlet diameter, the cooling capacity increases from 0.147 to 0.185 kW. Meanwhile, for convergent-divergent nozzle with 1.5 mm throat diameter, the cooling capacity increases from 0.177 to 0.231 kW. Compared with using convergent nozzle with 1.5 mm out diameter, it brings 15.3% average rate of increase under the same mass flow rate by using convergent-divergent nozzle with 1.5 mm throat diameter.

In conclusion, with the same mass flow rate, using convergent-divergent nozzle brings more cooling capacity than using convergent nozzle as the minimum diameter is 1.5 mm. What's more, the rate of increase is more obvious with the increase of mass flow rate. This is mainly because that the solution can be accelerated and expanded by using convergent-divergent nozzle, which contributes to atomization of solution. Then, the contact area is increased and the cooling capacity is improved. On the other hand, the convergent nozzle could not promote the absorption process like convergent-divergent nozzle because of structural deficiency.

CONCLUSION

This study applies liquid-gas ejector into absorption refrigerator to investigate the effects of structure and size of nozzle on cooling capacity by experiment. The conclusions are as follows:

- For convergent-divergent nozzle, the cooling capacity increases with the decrease of throat diameter.
- For convergent nozzle, the cooling capacity increases with the increase of outlet diameter.
- Under the same experiment condition, the ejector with convergent-divergent nozzle brings more cooling capacity than the ejector with convergent nozzle.

ACKNOWLEDGMENT

The authors are grateful for the financial support from National Natural Science Foundation of China (No. 50776011) to this project.

REFERENCES

Eames, I.W. and S. Wu, 2000. A theoretical study of an innovative ejector powered absorption-recompression cycle refrigerator. Int. J. Refrig., 23(6): 475-484.

Fujita, I. and E. Hihara, 2005. Heat and mass transfer coefficients of falling-film absorption process. Int. J. Thermal Sci., 48(13): 2779-2786.

Islam, M.A., A. Miyara and T. Setoguchi, 2009. Numerical investigation of steam absorption in falling film of LiBr aqueous solution with solitary waves. Int. J. Refrig., 32(7): 1597-1603.

Kim, K.J., N.S. Berman, D.S.C. Chau and B.D. Wood, 1995. Absorption of water vapour into falling films

of aqueous lithium bromide. Int. J. Heat Mass Transfer, 18(7): 486-494.

Kyung, I., K.E. Herold and Y.T. Kang, 2007a. Experimental verification of H2O/LiBr absorber bundle performance with smooth horizontal tubes. Int. J. Refrig., 30(4): 582-591.

Kyung, I., K.E. Herold and Y.T. Kang, 2007b. Model for absorption of water vapor into aqueous LiBr flowing over a horizontal smooth tube. Int. J. Refrig., 30(4): 591-600.

Medrano, M., M. Bourouis and A. Coronas, 2002. Absorption of water vapor in the falling film of water-lithium bromide inside a vertical tube at air-cooling thermal conditions. Int. J. Thermal Sci., 41(9): 891-898.

Sun, D.W., I.W. Eames and S. Aphornratana, 1996. Evaluation of a novel combined ejector-absorption refrigeration cycle-I: Computer simulation. Int. J. Refrig., 19(3): 172-180.

Takamatsu, H., H. Yamashiro, N. Takata and H. Honda, 2009. Vapor absorption by LiBr aqueous solution in vertical smooth tubes. Int. J. Refrig., 26(6): 659-666.

Yoon, J.I., T.T. Phan, C.G. Moon and P. Bansal, 2005. Numerical study on heat and mass transfer characteristic of plate absorber. Appl. Thermal Eng., 25(14-15): 2219-2235.