Research Journal of Applied Sciences, Engineering and Technology 4(17): 3119-3124, 2012
ISSN: 2040-7467

Submitted: March 12, 2012 Accepted: April 08, 2012 Published: December 01, 2012

Theoretical Study on Real Tooth Surface of Novel Toroidal Worm by the Forming Method

Chen Houjun, Zhang Xiaoping, Wang Junze and Zhang Yan
School of Mechanical Engineering, Nantong University, Nantong, Jiangsu, P.R. China

Abstract: The aim of this paper is to validate the rationality of the forming method for the worm surface in a novel toroidal worm-gearing with spherical meshing elements, which is made up of worm, steel balls and worm gear. Based on the directrix of worm surface, the mathematic model of worm surface is established and the directrix-based forming method for machining worm surface is proposed. Further, the principle error in the machining process is analyzed and the theoretic and real tooth surfaces of worm are fitted and compared on Open GL platform. The results show that the tooth profile error can be controlled at the range of $0\sim1\times10^{-5}$mm and it is always 0 at the pressure angle.

Keywords: Toroidal worm, spherical meshing element, Forming method, real tooth surface

INTRODUCTION

The worm gearing is widely used in modern industry, such as the automobile, the machine tools, the metallurgy machine and the elevator systems, etc. However, there are some shortages in general worm drive, such as low efficiency and large heat, thus it is usually applied in low/medium power situation. In order to meet the requirements of modern transmission, some improved worm drives are constantly suggested. Therein, a new toroidal worm pair with spherical meshing elements is developed, which changes the sliding pair into the rolling pair and accordingly the drive efficiency is improved (Liu, 1997 and 1999). Because most part of steel ball used as the tooth of worm gear is placed in the spherical socket distributing at the splitting-type worm body, then the actual contact area of the steel ball and the worm surface is decreased and it is easy to result in the edge contact between the meshing parts. Correspondingly, the loading capacity is weaken and the assembly accuracy of splitting-type worm gear must be severely ensured. In view of this, some further improvements to this worm pair are operated (Chen, 2009). In new design idea, the body of worm gear was specifically considered as an integral part and the position of steel ball is guaranteed by the co-action of worm pair in the meshing zone and the additional cage in the out of the meshing zone. As a result, the assembly accuracy can be appropriately reduced, the contact area of the meshing parts is enlarged and the loading capacity will be increased.

As for the manufacturing of worm surface, the strategy that the worm was roughly cut with the fly blade and then grinded with the ball-end grinding wheel on the hobbing machine was proposed (Cai and Yao, 2003).

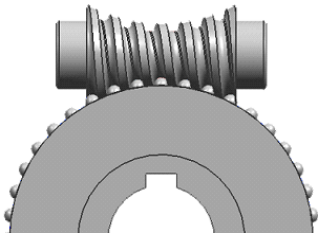

Fig. 1: The toroidal worm pair

Generally, the drive performance is influenced by real tooth surface (Zhang *et al*., 1994; Litvin and Seol, 1996; Brauer, 2005), but the influence of manufacturing method on real worm surface with the spherical meshing elements was not revealed in these literatures.

Based on the mathematical model of tooth surface of toroidal worm with spherical meshing elements, for the manufacturing of worm surface on CNC machine center, the directrix- based forming method is proposed and the principle error of manufacturing is analyzed. From the theoretical point of view, the theoretical and real worm surfaces are fitted by modeling on OpenGL platform and the machining precision is estimated.

MATHEMATICAL MODEL OF WORM SURFACE AND ITS GEOMETRIC PROPERTIES

Mathematical model of worm surface: As shown in Fig. 1, the tooth surface of toroidal worm is generated by the enveloping of steel ball used for the tooth of worm gear and the locus of center of steel ball relative to the worm is the helix, which is the directrix determining the worm surface (normal circular-arc surface). In order to

Corresponding Author: Chen Houjun, School of Mechanical Engineering, Nantong University, Nantong, Jiangsu, P.R. China

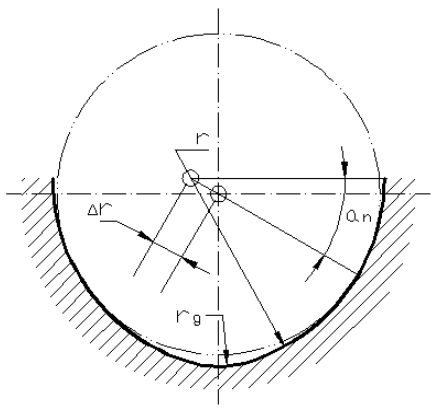

Fig. 2: The tooth profile of worm

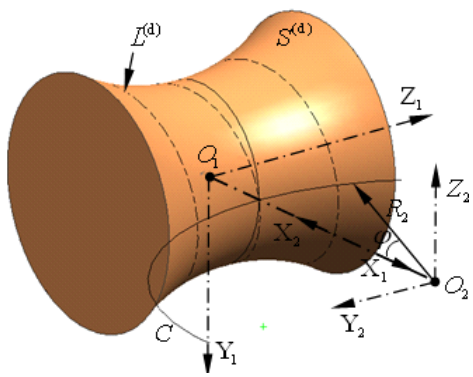

Fig. 3: The base surface and its coordinate system

reduce the sensitivity to the errors of the drive pair, the worm surface and the steel ball are mismatched (i.e. the point-meshing contact). As shown in Fig. 2., the main tooth profile of worm is a concave arc of radius r in the normal plane of directrix, while its center is offset from the directrix in the direction of pressure angle a_n by the offset distance Δr. The fillet curve is a concave arc of radius r_g, which joins the bottom of tooth space.

For the toroidal worm, the base surface of worm is a toroid generated by rotating a circular-arc generant around the worm axis that does not intersect the circular-arc. As shown in Fig. 3, in the coordinate system$\{O_1; X_1\ Y_1Z_1\}$ attached to the worm, the vector equation of generant C is defined by the following expression:

$$C:\rho=\left(A-R_2\cos\varphi\right)i_1-R_2\sin\varphi k_1 \qquad (1)$$

where, R_2 is the radius of generant and also the radius of pitch circle of worm gear; A is the centre distance,φ is the rotating angle parameter about the axis of worm gear.

According to the generating theory of toroid, the base surface $S^{(d)}$ is defined by:

$$S^{(d)}:P=B(\lambda)\rho=\left(A-R_2\cos\varphi\right)e(\lambda)-R_2\sin\varphi k_1 \qquad (2)$$

where, λ is the rotating angle parameter of the generant C about the worm axis Z_1B (λ) is the rotation group about Z_1, e(λ) is the circle vector function about Z_1 and their computing rules are listed in the literatures (Chen *et al.*, 2006 and 2008), respectively.

When φ and λ satisfy the condition φ = −Iλ , a right-handed toroidal helix (i.e., the directrix of worm surface) $L^{(d)}$ is generated on $S^{(d)}$. Here, I is the speed ratio of worm gearing. Based on Eq. (2), the vector equation of $L^{(d)}$ follows:

$$L^{(d)}:R^{(d)}=\left(A-R_2\cos(I\lambda)\right)e(\lambda)+R_2\sin(I\lambda)k_1 \qquad (3)$$

According to the definition of normal circular-arc surface, the worm surface can be generated by the sweeping of tooth profile (circular-arc generatrix) with single degree of freedom along the directrix and the tooth is symmetrical about the normal direction of the base surface of worm. Because the tooth profile is the circular-arc, the geometric properties of worm surface will mainly depend on the directrix. In order to represent the worm surface easily, a moving frame $\{e_1e_2e_3\}$ is constructed at the directrix. Thereinto, e_1 is the unit tangent vector of the directrix, e_3 is the unit normal vector of the base surface of worm and e_2 is derived by the right-hand rule and they can be described as:

$$\begin{cases} e_1=\dfrac{R_\lambda^{(d)}}{\left|R_\lambda^{(d)}\right|} \\ e_3=\dfrac{P_\varphi\times P_\lambda}{\left|P_\varphi\times P_\lambda\right|} \\ e_2=e_3\times e_1 \end{cases} \qquad (4)$$

Based on Eq. (3) and (4), the worm surface can be described by:

$$\begin{aligned} R=R^{(d)}&+r(\cos\theta e_2+\sin\theta e_3) \\ &-\Delta r(\cos\alpha_n e_2+\sin\alpha_n e_3) \end{aligned} \qquad (5)$$

where, θ is the polar angle defining the tooth profile in the frame $\{e_2e_3\}$.

Geometric properties of worm surface: As mentioned previously, the directrix will mainly determine the geometric properties of worm surface. Here, the discussion on the micro-geometric properties of worm surface is operated based on the directrix.

According to the differential geometry, the differential relationships of moving frame $\{e_1e_2e_3\}$ can be represented as:

$$\begin{cases} \dfrac{de_1}{ds} = e_2k_g + e_3k_n \\ \dfrac{de_2}{ds} = e_3\tau_g - e_1k_g \\ \dfrac{de_3}{ds} = -e_1k_n - e_2\tau_g \end{cases} \tag{6}$$

where, S is the arc parameter of the directrix, k_g , k_n and τ_g τgdenote the geodesic curvature, normal curvature and geodesic torsion of the directrix.

According to Eqs. (3), (4) and (6), k_g , k_n and τ_g can be derived as:

$$\begin{cases} k_g = \dfrac{(1+\sin^2\mu)\sin(I\lambda)}{\sqrt{(A-R_2\cos(I\lambda))^2+(IR_2)^2}} \\ k_n = \dfrac{(A-R_2\cos(I\lambda))\cos(I\lambda)-I^2R_2}{(A-R_2\cos(I\lambda))^2+(IR_2)^2} \\ \tau_g = 0 \\ \sin\mu = \dfrac{IR_2}{\sqrt{(A-R_2\cos(I\lambda))^2+(IR_2)^2}} \end{cases} \tag{7}$$

As a special case of moulding surface, two principal directions of worm surface are the tangential directions of the directrix and the tooth profile, respectively and the corresponding principal curvatures can be expressed as:

$$\begin{cases} k_{s1} = -\dfrac{k_g\cos\theta + k_n\sin\theta}{1-r(k_g\cos\theta+k_n\sin\theta)} \\ k_{s2} = \dfrac{1}{r} \end{cases} \tag{8}$$

Note that, the offset Δ_r is far less than the radius r of main tooth profile, thus it has little influence on the geometric properties of worm surface and is not embodied in this expression.

DIRECTRIX-BASED FORMING METHOD OF WORM SURFACE AND ITS PRINCIPLE ERROR

Directrix-based forming method of worm surface: From the manufacturing strategy point of view, there are the forming method and the generating method in the gear-tooth manufacturing, here the former is applied to the generation of worm surface.

As for the worm, its tooth profile is always in the normal plane of directrix, which gives the convenience to cut the tooth surface with the forming method. The tooth profile of worm can be selected as the cutting edge of the finger milling-cutter and the cutter axis always keeps at the normal direction of the base surface of worm in the cutting process and the cutter center always moves along the directrix of worm surface. The relative motion between the milling cutter and the worm blank follows the transmission ratio of worm pair and the generation of worm surface is the enveloping result of the cutter surface. It can be deduced from the Eq. (8) that the principal curvature k_{s1} of worm surface is far less than the principal curvature k_{s2} and thus the minimum radius of curvature of worm surface is r . It means that the machining interference can be automatically avoided when the worm surface is cut with the present milling-cutter and method.

According to the meshing theory of gear (Wu, 1982), the motion between the cutter surface and the cutting worm surface meets the meshing equation at the contact point and it can be represented by:

$$v_{III} \bullet n = 0 \tag{9}$$

where, v_{III} is the relative velocity of contact points, n is the common normal vector of contact surfaces at the contact point.

To the relative velocity v_{III} , it can be defined by:

$$v_{III} = \omega_2 \times r_{t2} - \omega_1 \times r_{t1} \tag{10}$$

where ω_1 is the angular velocity of the worm, ω_2 is the swing angular velocity of the cutter, r_{t1} is the radius vector of worm surface,r_{t2} is the radius vector of the cutter surface.

Principle error of machining method: Because the tooth shape of worm gear is simple, it is convenient to discuss the conjugating problems from the worm gear. As shown in Fig. 4, the coordinate system $\{O_2; X_2\ Y_2\ Z_2\}$attached to the worm gear is originated at the rotating center O_2 and the positive direction of X_2 -axis reverses that of X_1-axis and the positive direction of Y_2-axis reverses that of Z_1-axis. Additionally, the center O_2 is also the swing center of finger milling-cutter in the forming method.

In order to describe the cutter surface, the coordinate system $\{O_t; i_tj_tk_t\}$ attached to the cutter is originated at the cutter center point O_t , which is the intersection of radial line of main tooth profile at the direction of pressure angle. Thereinto, the unit vector j_t points to the positive direction of Z_2-axis, k_t is the unit normal vector of the base surface of worm. The relationship of coordinate system $\{O_t; i_tj_tk_t\}$ and $\{O_2; X_2\ Y_2\ Z_2\}$follows:

$$\begin{cases} i_t = -\sin\varphi i_2 + \cos_\varphi j_2 \\ j_t = k_2 \\ k_t = \cos\varphi i_2 + \sin\varphi j_2 \end{cases} \tag{11}$$

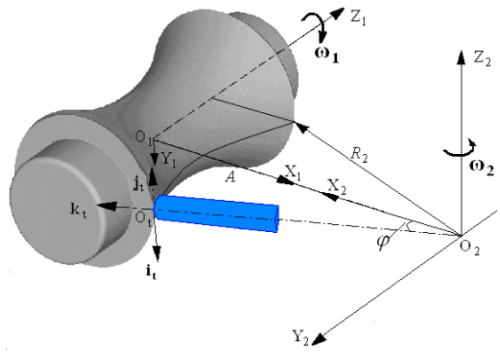

(a) The tool pose

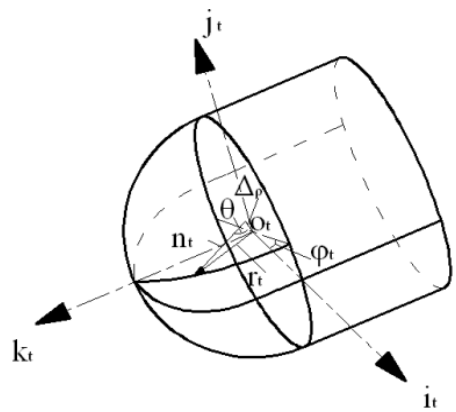

(b) The cutter surface

Fig. 4: Schematic diagram of milling the toroidal worm

where φ is the swing angle of the cutter and is also the rotating angle parameter defining the generating circular-arc of base surface; i_2, j_2 and k_2 are unit vectors of X_2-, Y_2-, Z_2-axes, respectively.

In the coordinate system $\{O_t; i_t j_t k_t\}$, the radius vector equation of the cutter surface can be defined as:

$$r_t = rn_t + \Delta_\rho \tag{12}$$

where n_t is the normal vector of the cutter surface and Δ_ρ is the offset vector of the center of main cutting-edge pointing to the cutter center point O_t.

Referring to Fig. 4(b) and 2, the components of n_t and Δ_ρ in the coordinate system $\{O_t; i_t j_t k_t\}$ can be defined as:

$$\begin{cases} n_{ti} = \cos\theta\cos\varphi_t \\ n_{tj} = \cos\theta\sin\varphi_t \\ n_{tk} = \sin\theta \end{cases} \tag{13}$$

$$\begin{cases} \Delta\rho_i = -\Delta r\cos\alpha_n\cos\varphi_t \\ \Delta\rho_j = -\Delta r\cos\alpha_n\sin\varphi_t \\ \Delta\rho_k = -\Delta r\sin\alpha_n \end{cases} \tag{14}$$

where, θ is the polar angle defining the cutting-edge, which corresponds to the polar angle defining the tooth profile; φ_t is the rotating angle parameter of the cutting-edge about the cutter axis.

According to the transform relationship of coordinate systems, the cutter surface in the coordinate system $\{O_2; X_2\ Y_2\ Z_2\}$ can be represented as:

$$r_{t2} = R_2 k_t + rn_t + \Delta_\rho \tag{15}$$

In the coordinate system $\{O_2; X_2\ Y_2\ Z_2\}$, the radius vector equation of worm surface can be denoted as:

$$r_{t1} = r_{t2} - Ai_2 \tag{16}$$

The directions of ω_1 and ω_2 are the positive directions of Z_1- and Z_2-axes, respectively and the sizes of ω_1 and ω_2 meet the transmission ratio condition. Because the conjugate relationship is usually related to the transmission ratio, ω_1 and ω_2 in the coordinate system $\{O_2; X_2\ Y_2\ Z_2\}$ can be denoted as:

$$\begin{cases} \omega_1 = -j_2 \\ \omega_2 = Ik_2 \end{cases} \tag{17}$$

In the machining process, the contact line of the cutter surface and the cutting worm surface is the circular arc and the cutter surface is also a rotational surface, thus these make that common normal vector n is the normal vector n_t of the cutter surface. In the coordinate system $\{O_2; X_2\ Y_2\ Z_2\}$, the components of n_t can be defined as:

$$\begin{cases} n_{2x} = -\cos\theta\cos\varphi + \sin\theta\cos\varphi \\ n_{2y} = \cos\theta\cos\varphi_t\cos\varphi + \sin\theta\sin\varphi \\ n_{2z} = \cos\alpha\sin\varphi_t \end{cases} \tag{18}$$

Substituting Eq. (10), (15)-(18) into Eq. (9) and simplifying, the following expression can be obtained:

$$\begin{aligned} \tan\varphi_t &= -\frac{IR_2\cos\theta + \Delta rI\sin(\theta - a_n)}{(A - R_2\cos\varphi)\cos\theta - \Delta r\cos\varphi\sin(\theta - a_n)} \\ &= -\frac{IR_2 + \Delta rI(\tan\theta\cos a_n - \sin a_n)}{(A - R_2\cos\varphi) - \Delta r\cos\varphi(\tan\theta\cos a_n - \sin a_n)} \end{aligned} \tag{19}$$

According to the engineering custom, the included angle between the directrix of worm surface and the parallel of base surface of worm is called as the lead angle φ_2 and it can be denoted as:

$$\tan\varphi_2 = -\frac{IR_2}{A - R_2\cos\varphi} \tag{20}$$

Eq. (19) is the characteristic equation of the contact line derived by the meshing theory, however Eq. (20) defines the lead angle of directrix of worm surface and it

is essentially the characteristic equation determining the theoretical contact line. By comparison, it can be concluded:

when $\theta = \alpha_n$, $\varphi_t = \varphi_2$. It means that there is no machining error between the real and theoretical surfaces at the position of pressure angle. This ensures the basic rule that the mismatched technology does not change the driving theory.

when $\theta \neq \alpha_n$ and only when Δr tends to be infinitesimal, the machining error can be negligible. However, the influence of Δr is inevitable during the actual machining process, so it will lead to an additional error $\Delta\varphi_t$ and the following expression can be obtained:

$$\varphi_t^* = \varphi_t + \Delta\varphi_t \tag{21}$$

where φ_t^* is actual rotating angle of instantaneous contact line between the worm and the cutter, $\Delta\varphi_t$ is additional rotating angle for correcting the instantaneous contact line's deviation from the ideal position.

According to Eq. (19)-(21), the following equation can be derived:

$$\tan\Delta\varphi_t = -\frac{\Delta rAI\sin(\theta-\alpha_n)}{[(A-R_2\cos\varphi)^2+(IR_2)^2]\cos\theta} \tag{22}$$

Since $\Delta\varphi_t$ is very small, we can regard $\Delta\varphi_t \approx \tan\Delta\varphi_t$. Farther, it can be transformed into a linearity error:

$$\begin{aligned}\Delta T &= (r\cos\theta - \Delta r\cos a_n)\Delta\varphi_t \\ &= -\frac{\Delta rAI(r\cos\theta-\Delta r\cos a_n)\sin(\theta-a_n)}{[(A-R_2\cos\varphi)^2+(IR_2)^2]\cos\theta}\end{aligned} \tag{23}$$

where, ΔT is the tangential error.

The tangential error can be controlled or eliminated by the adjustment in the assembly, however the normal error can not be eliminated and it is easy to cause the vibration and the noise (Zhao *et al*., 2008). As a result, it is important to calculate the normal error of worm. According to the transformation between the tangential and normal error, the normal error ΔN of worm surface can be obtained:

$$\Delta N = \frac{\Delta T^2}{2r} \tag{24}$$

Synthesizing Eq. (23) and (24), it can be seen that the normal error is the function including the parameters θ and φ . In the gear engineering, the accuracy of tooth surface usually shows at two aspects: the tooth profile error along the direction of tooth profile; the tooth alignment error along the direction of tooth length. When φ is constant, Eq. (24) represents the tooth profile error of worm surface; when θ is constant, Eq. (24) represents the tooth alignment error.

Table 1: The basic parameters of toroidal worm pair

Items	Value
Centre distance A	120 mm
Radius of generating circular-arc R_2	100 mm
Speed ratio *I*	1:40
Radius of main tooth profile r	5.5 mm
Radius of fillet arc r_g	3 mm
Pressure angle α_n	30º
Offset of main tooth profile Δr	0.5 mm

Fig. 5: Photograph of milling worm surface

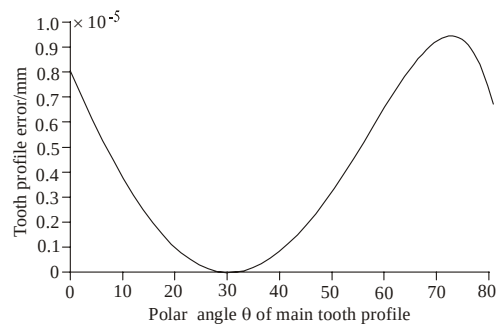

(a)Tooth profile error

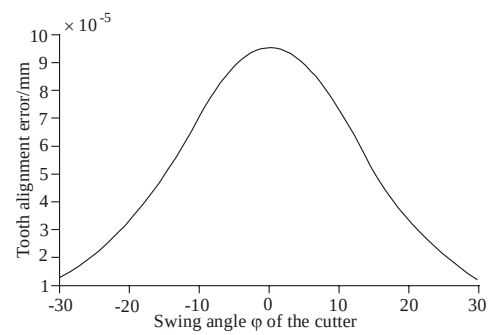

(b) Tooth alignment error

Fig. 6: Sketch of error

NUMERICAL EXAMPLE AND DISCUSSION

Based on the design parameters presented in Table 1, a prototype of toroidal worm is cut on the CNC machine center, as shown in Fig. 5. In the machining process, the tool path is programmed by the directrix of worm surface. In order to estimate the machining precision, the principle error of directrix-based forming method is quantitatively analyzed. As shown in Fig. 6, the variation rules of the

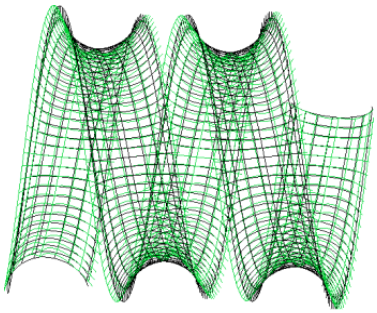

(a) Theoretical and real warm surfaces

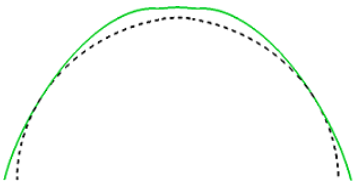

(b) Theoretical and real worm surfaces/tooth profiles

Fig. 7: Theoretical and real warm surfaces/tooth profiles

tooth profile error related to the polar angle of main tooth profile and the tooth alignment error related to the swing angle of the cutter are presented, respectively. We can find that the tooth profile error is controlled at the range of $0\sim1\times10^{-5}$mm and it is 0 at the pressure angle; the tooth alignment error is symmetrical about the gorge circle of worm (i.e., the location of $\varphi = 0^{o}$) and gradually reduces to both ends of worm. The results show that the order of principle error of the directrix-based forming method is very small, thus the correctness and practicality of this method are further verified.

In order to represent the error of tooth surface vividly, the theoretical and real worm surfaces are fitted on the OpenGL platform and illustrated in Fig. 7. Thereinto, Fig. 7b presents the theoretical tooth profile (dashed curve) and real tooth profile (solid line) in the normal sections of corresponding surfaces and it clearly shows that there is no error between the real and theoretical surfaces at the location of given pressure angle. We can deduce that the presented worm pair fully satisfies the meshing theory at the commanded position, thus it realizes the target of the point-meshing strategy and can improve the adaptability to errors of toroidal worm pair.

CONCLUSION

Based on the mathematic model of worm surface, the directrix-based forming method is presented and its principle error is particularly analyzed. The theoretical and real surfaces are fitted and compared on the OpenGL platform and their difference of normal section is presented. The result shows that the order of machining error from the directrix-based forming method is very small and the theoretical and real surfaces are tangent at the location of commanded pressure angle, which follows the rule of mismatched technology for the worm surface. The above discussion is conducted based on the machining theory, thus the so-called real worm surface is a theoretical result. However, it still can provide a theoretical basis for the error compensation in the machining process and the adjustment in the assembly.

ACKNOWLEDGMENT

This study was supported by the National Natural Science Foundation of China (Grant No. 51105210) and Nantong University (Grants No.10ZY006 and No.201010).

REFERENCES

Brauer, J., 2005. Transmission error in anti-backlash conical involute gear transmissions: A global-local FE approach. Finite Elem. Anal. Design, 41: 431-457.

Cai, Y.J. and L.G. Yao, 2003. Research on tooth profile analyzing and manufacturing for roller (ball) enveloping circular worm. J. Fuzhou University (Natural Science Edition), 31(1): 62-64.

Chen, H.J., Z.Y. Duan, H.J. Wu and J. Liu, 2006. Study on the general principle of normal circular-arc gear transmission. Mech. Mach. Theory, 41: 1424-1442.

Chen, H.J., Z.Y. Duan, J. Liu and H.J. Wu, 2008. Research on basic principle of moulding-surface conjugation. Mech. Mach. Theory, 43: 791-811.

Chen, H.J., 2009. Research on principle of moulding-surface conjugation and technology of toroid worm transmission with spherical meshing elements. Ph.D. Thesis, Dissertation, Dalian University of Technology, Dalian, China.

Litvin, F.L. and I.H. Seol, 1996. Computerized determination of gear tooth surface as envelope to two parameter family of surfaces. Comput. Method. Appl. M., 138(1-4): 213-225.

Liu, H.R., 1997. Ball enveloping toroidal worm drive. J. Mech. Transm., 21(3): 52.

Liu, H.R., 1999. The design and processing of ball enveloping toroidal worm drive. Mach. Design Manuf., (2): 33.

Wu, X.T., 1982. Meshing Principle of Gear. China Machine Press, Beijing.

Zhang, Y., F.L. Litvin, N. Maruyama and R. Takeda, 1994. Computerized analysis of meshing and contact of gear real tooth surfaces. ASME J. Mechanical Design, 116(3): 677-682.

Zhao, W.Z., G. Li, W.H. Zhao and Z.Y. Duan, 2008. Geometry simulation and nonlinear error analysis of free surfaces. J. Shenyang Univ. Technol., 30: 449-452.