Research Journal of Applied Sciences, Engineering and Technology 4(18): 3399-3405, 2012
ISSN: 2040-7467

Submitted: April 04, 2012 Accepted: April 25, 2012 Published: September 15, 2012

Determination of Number of Broken Rotor Bars in Squirrel-Cage Induction Motors Using Adaptive Neuro-Fuzzy Interface System

[1]Mehran Amani Juneghani, [2]Babak Keyvani Boroujeni and [3]Mostafa Abdollahi
[1]Department of Computer Engineering,
[2, 3]Department of Electrical Engineering, Boroujen Branch, Islamic Azad University, Boroujen, Iran

Abstract: For determination the number of broken rotor bars in squirrel-cage induction motors when these motors are working, this study presents a new method based on an intelligent processing of the stator transient starting current. In light load condition, distinguishing between safe and faulty rotors is difficult, because the characteristic frequencies of rotor with broken bars are very close to the fundamental component and their amplitudes are small in comparison. In this study, an advanced technique based on the Wavelet Adaptive Neuro-Fuzzy Interface System is suggested for processing the starting current of induction motors. In order to increase the efficiency of the proposed method, the results of the wavelet analysis, before applying to the Adaptive Neuro-Fuzzy Interface System, are processed by Principal Component Analysis (PCA). Then the outcome results are supposed as Adaptive Neuro-Fuzzy Interface System's training and testing data set. The trained Adaptive Neuro-Fuzzy Interface Systems undertake of determining the number of broken rotor bars. The given statistical results, announce the proposed method's high ability to determine the number of broken rotor bars. The proposed method is independent from loading conditions of machine and it is useable even when the motor is unloaded.

Keywords: Adaptive Neuro-Fuzzy Interface System (ANFIS), broken rotor bars, fault detection, Principal Component Analysis (PCA), wavelet

INTRODUCTION

A great number of induction motors are used in industrial factories. Induction motors are also often used in critical applications such as nuclear plants, aerospace and military applications, where the reliability must be of high standards. Therefore these motors account for more than 80% of all the motors in service today and they are increasingly replacing other motors. Squirrel cage induction motors are usually extremely reliable, however due to the extended life and usage failures occur in various parts of the motor (Ayhan *et al*., 2005).

Induction motor often exposed to a variety of undesirable conditions and situations such as misoperations. These unwanted conditions can cause the induction motor to go into a premature failure period, which may result in an unserviceable condition of the motor, if not detected at its early stages of the failure period (Li *et al*., 2000). The early detection of the incipient motor fault is thus of great concern.

In the following, a brief review of faults is presented. Faults in electric machines produce one or more of the following symptoms (Haji and Toliyat, 2001).

- Unbalanced air-gap voltages and line currents
- Increased torque pulsation
- Decreased average torque
- Increased losses and reduction in efficiency
- Excessive heating

The most prevalent faults in induction motors are briefly classified in the following four categories:

- **Bearing faults:** Almost 40-50% of all motor failures are bearing related. This kind of faults of induction motor often manifest themselves as rotor asymmetry faults from the category of eccentricity related faults.
- **Stator or armature faults:** These faults start as undetected turn-to-turn faults, which grow and culminate into major ones. Almost 30-40% of all reported faults of induction motor failures fall in this category. These faults result in asymmetry in the machine impedance causing the machine to draw unbalance phase currents.
- **Eccentricity related faults:** Is the condition of unequal air-gap between the stator and rotor. It is

Corresponding Author: Mehran Amani Juneghani, Department of Computer Engineering, Boroujen Branch, Islamic Azad University, Boroujen, Iran

called *static air-gap eccentricity* when the position of the minimal radial air-gap length is fixed in the space.

When the center of rotor is not at the center of rotation, so the position of the minimal radial air-gap length rotates with the rotor, the *dynamic eccentricity* is occurred. This case often caused by a bent rotor shaft, bearing wear or misalignment, mechanical resonance at critical speed, etc. In practice, an air-gap eccentricity of up to 10% is permissible. Both static and dynamic eccentricities tend to exist in practice.

- **Broken rotor bar and end ring faults:** Rotor failures now account for 5-10% of total induction motor failures. Broken rotor bars give rise to a sequence of side-bands as (1) (Yazidi *et al*., 2005):

$$f_b = (1 \pm 2ls)f \quad 1 = 1, 2, 3, ... \tag{1}$$

Since the f_b components in the stator current are relatively faint in the beginning stage of broken rotor bar fault, high sensitivity is necessary to realize early detection of broken rotor bars that this problem is solved by using of excellent Digital Signal Processing (DSP) techniques such as self-adaptive filter technique. It is important to notice that in practice the current side bands around fundamental may exist even when the machine is healthy. Also rotor asymmetry, resulting from rotor ellipticity, misalignment of the shaft with the cage, magnetic anisotropy, etc., determines the same frequency components like the broken rotor bars. Therefore, in order to correct and sensitive detection of broken rotor bars, other features of this fault need to be investigated (Povineli *et al*., 2002).

There are several reasons for rotor bar breakage including:

- Thermal stress
- Electromagnetic forces
- Electromagnetic noise and vibration
- Centrifugal forces
- Environmental stress for example abrasion of rotor
- Mechanical stress due to loose laminations
- Fatigue parts
- Bearing failure

The essential reason of rotor bars break, is the action of the slot linkage flux, resulting from bar current, generate electrodynamics' forces (Ayhan *et al*., 2005). These forces are proportional to rotor current squared (I^2) and are unidirectional. They tend to displace the bar radially between the top and bottom of the slot and vibrate the bar at twice the frequency of the rotor current. Hence, they cause to a bending stress in the bar. Over time this stress leads to failure of rotor bars.

In the past, there has been a lot of research to provide new condition monitoring techniques for induction motors based on analyzing vibration signals, or signals other than currents, that implementation of these methods are expensive and it is necessary to sufficient care to mechanical installation and transmitting problems. Then researches represent that the signatures of all signals are available on electrical terminals (currents) of electric machines including the vibration signals.

Recently, two innovative diagnostic tests have been presented, namely the supply disconnection test and the start-up test. These tests can be carried out without a load when the test is realized in a laboratory and without disconnecting the motor from its load when the machine is used in industrial applications. The basic idea is to conduct spectral analysis of stator voltages after supply disconnection or of stator currents during the motor start-up (Cupertino *et al*., 2005).

The first diagnostic tests, is carried out measuring the voltages at stator terminals after supply disconnection (Cupertino *et al*., 2004). When there are broken rotor bars, the m.m.f. generated by rotor windings results distorted and some particular harmonics of the stator-induced voltages increase their amplitudes. The diagnostic technique is based on monitoring the amplitudes of these voltage harmonics by analyzing the spectrum of the voltage measured at motor terminals.

The other diagnostic test consists in analyzing some characteristic harmonics of the current space-vector during motor starting (Zhang *et al*., 2003). The wavelet analysis has been adopted to obtain a time-scale representation of the motor current during starting. During starting, the rotor current of the induction machine is very high, typically 5 to 6 times rated current. Under these conditions, rotor faults should be much more evident than under normal running conditions. There is also the advantage that the starting current is less sensitive than the running current to the level of motor load and so reliable data analysis can be obtained even with motors with no mechanical load (Supangat *et al*., 2005).

Several diagnostic techniques have been already proposed to detect broken rotor bars in induction motors. Most of them are based on the steady-state analysis of stator voltages and currents using Fast Fourier Transform (FFT). In order to be effective, most of the diagnostic techniques proposed in related literature require the machine to be loaded and at steady state condition. In addition, the steady-state algorithms focus only on low slips while improved detection can be made at high slips

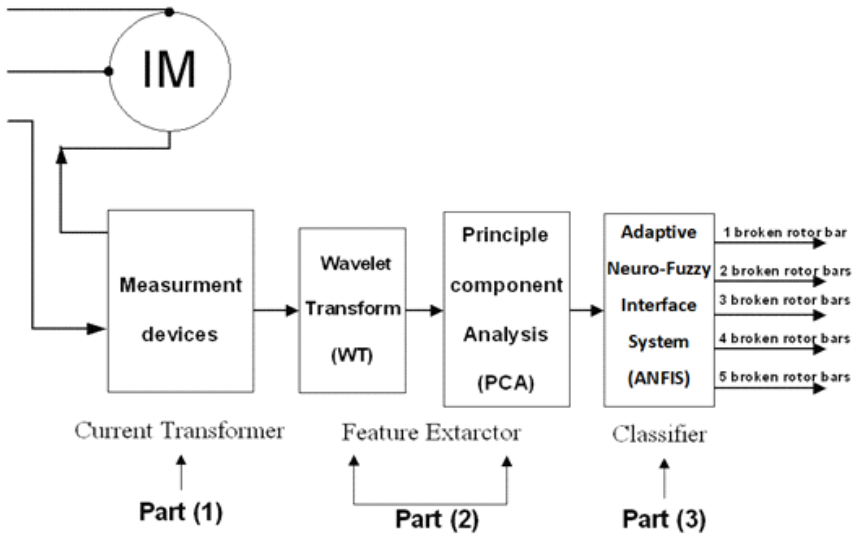

Fig. 1: The overall diagram of the proposed method

(Douglas *et al*., 2005). To solve this problem, Short Time Fourier Transform (STFT) is introduced. Although STFT can be used for analyzing transient signals using a time-frequency representation, it can only analyze the signal with a fixed sized window for all frequencies, which leads to poor frequency resolution.

A challenge of the transient analysis is difficulty in trying to analyze the complex current transients. It consists of a non stationary fundamental frequency as well as non stationary frequencies associated with the rotor bars. The rotor bar frequencies change with the machine slip that changes the phase and amplitude of the fundamental component (Douglas *et al*., 2005). Therefore, due to the transient nature of the signal, conventional FFT and STFT analysis are not suitable for analyzing starting currents. Therefore the interest towards new broken-bars detection techniques, more effective and independent of test conditions, is still high.

In this study, the wavelet technique is used to overcome this problem by using a variable sized window. Considering the nonlinear equations governing the squirrel cage induction motors and the characteristics of the ANFIS in stimulation and analyzing the nonlinear equations, five ANFIS are used as powerful nonlinear classifiers for determining the number of broken rotor bars in the squirrel cage induction motors. Moreover, in order to reduce the correlation between the results of wavelet analysis and increasing efficiency of ANFIS, these results preprocessed by Principle Component Analysis (PCA), before applying to ANFIS.

An overall of proposed method: The overall diagram of the detection method is shown in Fig. 1. IM is an induction motor under test. This diagram contains of three parts:

Part one contains the Current Transformer (CT) which undertakes the monitoring of one of the phase current in the induction motor.

Part two is the feature extractor block which is divided in two sections. The first section undertakes the wavelet analysis of the current signal which is received from part one. The given results of this section are used for sending to the second section of the feature extractor. The second section contains the PCA and given results of PCA block, used for applying the third part.

Part three which is suggested as a classifier and undertakes the determination of the broken rotor bars' number, is constituted from several ANFIS and the output of this part, announces the number broken rotor bars of induction motor.

METHODOLOGY

Description of the wavelet methods: The wavelet transform is governed as (2):

$$C(a,\varphi)=\int_{-\infty}^{+\infty} f(t)\psi(t)\varphi,t)dt \tag{2}$$

Equation (2) shows that the main concept of the wavelet transform is to divide a signal into its various scaled and shifted versions of a wavelet, in a similar fashion that the Fourier transform divides a signal into its sinusoidal components of various amplitudes and frequencies. A high scale wavelet corresponds to a "stretched" wavelet, which has a slow rate of change and hence low frequency. On the other hand, a low scale wavelet corresponds to a "compressed" wavelet with a rapid changing detail and hence high frequency.

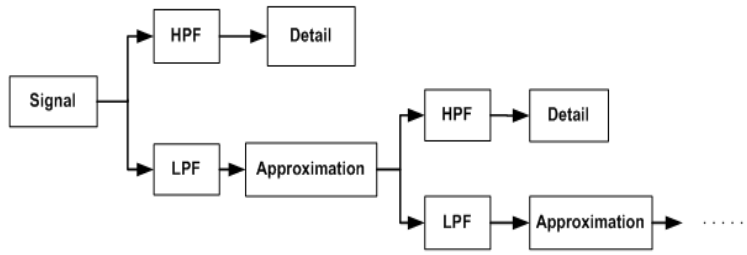

Fig. 2: Multiple level decomposition in terms of the wavelet used

There are two types of wavelet transform, the Continuous Wavelet Transform (CWT) and the Discrete wavelet Transform (DWT), which can be used to analyze the Induction Motor (IM) starting current. The CWT utilizes a continuous range of scales and shifts at the expense of increased computational time, whereas the DWT utilizes a discrete range (in power of 2) of scales and shifts. Since the CWT utilizes a continuous range, it is more accurate than the DWT counterpart and hence the CWT is the technique used in this study. However, DWT may be more beneficial in practical applications because of the shorter computational time, which is of the order of 2^{nm} (where n = number of scales and m = number of shifts).

The operation of the wavelet transform is illustrated in Fig. 2. At each level, the signal is separated using low and high pass filters into a "detail" component, which is the high frequency components (in terms of the wavelet used) and an "approximation" component, which is the low frequency components (in terms of the wavelet used), by correlating the scaled and shifted versions of the wavelet. The correlation between the signal and the wavelet at each level of scaling and shifting is termed the wavelet coefficient. The wavelet technique allows the analysis of a transient signal, such as the starting current of an induction motor, where a normal FFT would not be beneficial.

In this study, the CWT utilized to extract and analyze the transient characteristics of the starting current of an induction motor. The wavelet that applied in this study is from Mexican Hat family. This wavelet has no scaling function and is derived from a function that is proportional to the second derivative function of the Gaussian probability density function. The transform function of this wavelet is described as (3):

$$mexh(x) = c\left(1 - x^2\right)e^{-\frac{1}{2}x^2} \tag{3}$$

where,

$$c = \frac{2}{\left(\sqrt{3}\pi^{\frac{1}{4}}\right)} \tag{4}$$

Principle Component Analysis (PCA): PCA is the best-known technique in multivariate analysis and is referred to as Karhunen-Lobve transformation in the framework of probability theory. The practical interest in PCA is related to the following properties:

- It provides an effective technique for dimensionality reduction in particular. This goal can be obtained by discarding those combinations of data which show small variances corresponding to the principal directions.
- It preserves the information content of the input data if the right number of components is retained.
- The set of projections formed by PCA are uncorrelated and this can be useful when optimizing by using a procedure based on gradient descent: in this case the use of uncorrelated components constraints the Hessian matrix of the cost functions with respect to the free parameters of the model to be nearly diagonal.

In this study, in order to reduce correlation between training data and test data, PCA is used.

Principle component analysis algorithm: Suppose that observations for m features form an $n \times m$ matrix, signed as $X = (x_{ij})$ i = 1, 2, .., n j = 1, 2…, m The PCA is processed as follows (Chuanqiang *et al*., 2007).

- Standardize the data as (5):

$$x_{ij} = \frac{x_{ij} - x_{j,mean}}{\sigma\left(x_j\right)} \tag{5}$$

- Calculate $m \times m$ correlation matrix C as (6), which is symmetrical and positive definite:

$$C = X^T X \tag{6}$$

- The eigenvalue λ_i and the eigenvector P_j of C are computed in decreasing order of magnitude ($\lambda_1>\lambda_2>\ldots>\lambda_m$). The original data then can be expressed in terms of the eigenvalues and eigenvectors, which define the principal component directions as (7):

$$X = t_1 p_1^T + t_2 p_2^T + \ldots + t_k p_k^T + E \quad (7)$$

where, $E = t_{k+1}p^T_{k+1} + t_{k+2}p^T_{k+2} + \ldots + t_m p^T_m$.
Equation (6) can be rewritten in the matrix form as (8):

$$X = TP^T + E \quad (8)$$

where, $T = [t_1, t_2, \ldots, t_k]$ with $k<m$ is called the principal component scores, $P = [p_1, p_2, \ldots, p_k]$ is called the principal component loadings. E is the residual and k ($k<m$) is the number of the scores. Then condition of the optimizing Eq. (8) is that the Euclidean norm of the residual matrix E must be minimized. To satisfy this criterion, it has been demonstrated that $P = [p_1, p_2, \ldots, p_k]$ is the eigenvector of the covariance matrix of X.

An approximate model, comprising of the first k terms of (7), will capture most of the observed variance in X if the data are correlated. The percentage that the information in X can be expressed as the first k terms of principals is Q that can be expressed as (9):

$$Q = \frac{\lambda_1 + \lambda_2 + \ldots + \lambda_k}{\sum_{j=1}^{m} \lambda_j} \quad (9)$$

From (5) and (6) the scores can be obtained as (10):

$$T = XP \quad (10)$$

It can be seen that PCA is a linear mapping of the original observed data. The load vector P is the coefficients for linear transformation. After getting P and T, the reconstructed data can be written as (11):

$$X' = TP^T + E \quad (11)$$

where, $X' = [x_1, x_2, \ldots, x_k]^T$ is the reconstruction of observed data and the dimensions of the data is reduced form m to k ($k<m$). The principle of PCA is shown in Fig. 3. The method of determining the number (k) of the principle components is the key in application of the PCA.

Adaptive Neuro Fuzzy Interface System (ANFIS): Adaptive Neuro-Fuzzy Inference Systems are Fuzzy Sugeno models put in the frame work of adaptive systems.

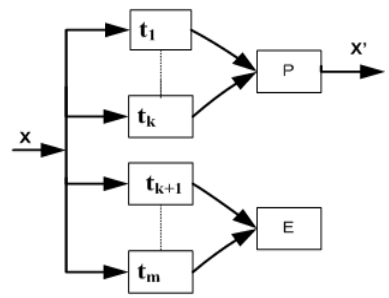

Fig. 3: The principle of PCA

The topology of the ANFIS model including 2 inputs, is shown in Fig. 4. ANFIS is able to construct models with both subtractive clustering and grid partition categories (Awadallah and Morcos, 2004). In this study, five Adaptive Neuro-Fuzzy Interface System (ANFIS) are applied for detection of the number broken rotor bars (between 1 to 5 broken rotor bars) of induction motor and the grid partition method is used for construct models of five ANFIS.

Grid partitioning is an approach for initializing the structure in a fuzzy inference system. For example, if Gaussian membership functions are chosen, the centers of the Gaussians are confined to corners of a rectangular grid in the initialization of the Fuzzy inference system.

The Adaptive Neuro-Fuzzy Inference Systems (ANFIS) have many usage in the identification, fault detection, control and signal processing. Particularly, these systems have a great analysis power in the processes which the equations between the variables are nonlinear and this feature has caused increasing in their usage.

Considering the nonlinear equations governing the squirrel cage induction motors and the obvious characteristics of the ANFIS in stimulation and analyzing the nonlinear equations, these systems considered as great candidates for careful fault detection in the induction motor.

The main goal of this study is determining the broken rotor bars number using ANFIS. This sysytem, receives the given results of data's principle component analysis which these data are gained from wavelet analysis of induction motor's starting current.

The input data for training the ANFIS are fourfold vectors which are contained of the lower sideband frequency (f_l), upper sideband frequency (f_h) and the appropriate amplitudes (A_l, A_h). As the training data are appropriate for broken rotor bars with maximize 5 bars, therefore the suggested procedure has the capability to determine maximum 5 broken rotor bars.

In this study in order to access the appropriate precision output beside the possibility of circuit construct,

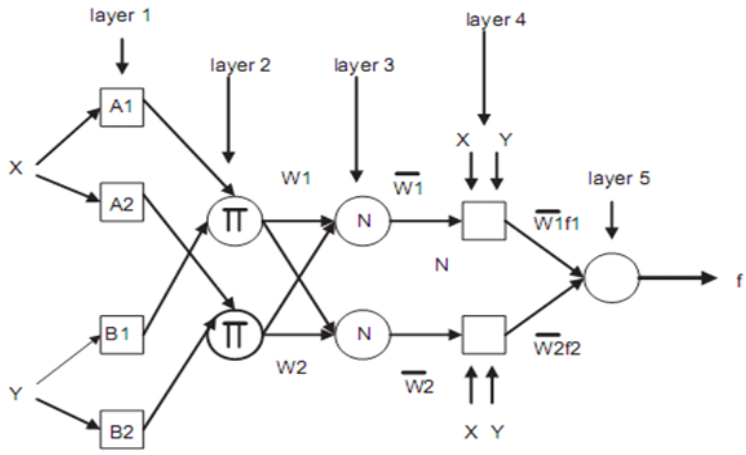

Fig. 4: Topology of ANFIS

Table 1: The characteristics of the used ANFIS

ANFIS number	Number of neurons in layer 1	Number of neurons in layer 2	Number of neurons in layer 3	Number of neurons in layer 4
ANFIS1	6	2	5	4
ANFIS2	3	3	2	2
ANFIS3	4	3	4	2
ANFIS4	5	2	5	2
ANFIS5	3	3	2	2

five ANFIS are used which are in parallel together and undertake the determination of the broken rotor bars' number. Each of these ANFIS is dealing with a particular number of broken rotor bars, between 1 to 5. The characteristics of these ANFIS are shown in the Table 1. Training and testing data of all systems, which are obtained from the output of the Principle Component Analysis (PCA), are similar. The numbers of training and testing data are respectively 45 and 5.

Performance evaluation: In order to evaluate the performance of the proposed broken rotor fault detection method, an accurate dataset should be prepared. To obtain a real dataset, it is necessary to break and weld the rotor bars of an induction motor that cause asymmetry in rotor properties, because the weld material is usually different from rotor material. Therefore, we use a dataset based on simulation of an induction rotor considering broken rotor bars effects using winding function. In this method, all rotor and stator bars are considered independently and the different number of broken rotor bars affected the model and the stator current.

The simulated motor is a typical 15 KW, 50 H, 400 V and 1460 rpm squired cage induction motor. The dataset includes 50 different data of broken rotor bars faults including 1, 2, 3, 4 and 5 broken bars (Saadat, 2002). Since there are only 50 available data, these data are used for training and testing the ANFIS. In each stage of ANFIS training, 45 data are randomly selected as training data and the other 5 data as testing data. Moreover, for calculating the average detection error, the program is run 30 times and the mean of the detection errors, for different number of broken rotor bars is calculated. Meanwhile in order to observe the effect of applying PCA in the proposed method, the experiments are also carried out without considering PCA.

Table 2: Average of error percentage of detection broken rotor bars

Number of broken rotor bars	Percentage of error of detection with PCA	Percentage of error of detection without PCA
1	2.76	9.70
2	0.00	0.00
3	5.47	8.13
4	2.10	3.38
5	1.39	4.23

Table 2 shows the results including experiments with applying PCA and without applying PCA. Averagely, considering PCA decreases the detection errors from 5.4 to 1.4%. Applying principle component analysis, cause a great improvement in the fault detection and determination of broken rotor bars. The given results, announce the high capability of the proposed method, in determination of the number of broken rotor bars and an obvious improvement than the past fault detection methods.

CONCLUSION

In this study, determination of the number of broken rotor bars is carried out by an advance signal processing method that is based on the composition of wavelet analysis, PCA and Adaptive Neuro-Fuzzy Interface System. Wavelet analysis has the ability to extract the suitable characteristics of induction motor's starting

current. Principle component analysis reduces the correlation between the extracted features for the adaptive neuro-fuzzy interface system, which this causes improvement in performance of the proposed method. Also, considering the nonlinear equations governing the squirrel cage induction motors, the adaptive neuro-fuzzy interface system has also the capability to analyzing these equations and the results of this method announce the suitable precision, fast responsibility and considerable improvement than the methods before.

Considering importance of the fast detection of broken rotor bars, the computational cost of the proposed method is low enough to implement in real time.

ACKNOWLEDGMENT

This study is a result of an approved research project in Islamic Azad University, Boroujen branch. Therefore we know necessary to thank this academic unit staunch for its most grateful support.

REFERENCES

Awadallah, M.A. and M.M. Morcos, 2004. ANFIS-based diagnosis and location of stator Inter-turn faults in PM brushless DC motors. IEEE Trans. Energ. Convers., 19(4): 795-796.

Ayhan, B., M.Y. Chow and M.H. Song, 2005. Multiple signature processing-based fault detection scheme for broken rotor bar in induction motors. IEEE Trans. Energ. Convers., 20: 336-343.

Chuanqiang, Y., G. Xiaosong, Z. An and P. Xingjie, 2007. An improvement algorithm of principal component analysis. The Eighth International Conference on Electric Measurment and Instruments, Aug. 16-July 18, pp: 529-534.

Cupertino, F., E.D. Vanna, L. Salvatore and S. Stasi, 2004. Analysis Techniques for detection of IM broken rotor bars after supply disconnection. IEEE Trans. Ind. Appli., 40: 526-533.

Cupertino, F., V. Giordano, E. Mininno and L. Salvatore, 2005. Application of supervised and unsupervised neural networks for broken rotor bar detection in induction motors. IEEE International Conference on Electric Machines and Drives, May 15-18, pp: 1895-1901.

Douglas, H., P. Pillay and A.K. Ziarani, 2005. Broken rotor bar detection in induction machines with transient operating speeds. IEEE Trans. Energ. Convers., 20: 135-141.

Haji, M. and H.A. Toliyat, 2001. Pattern recognition-A technique for induction machines rotor broken bar detection. IEEE Trans. Energ. Convers., 16: 312-317.

Li, B., M.Y. Chow, Y. Tipsuwan and J.C. Hung, 2000. Neural-network-based motor rolling bearing fault diagnosis. IEEE Trans. Ind. Electr., 47: 1060-1069.

Povineli, R.J., J.F. Bangura, N.A.O. Demerdash and R.H. Brown, 2002. Diagnostics of bar and end-ring connector breakage faults in polyphase induction motors through a novel dual track of time-series data mining and time-stepping coupled FE-state space modeling. IEEE Trans. Energ. Convers., 17: 39-46.

Saadat, N., 2002. Fault simulation in rotor of induction motor using winding function and compare with results of finite elements and measurement methods. M.Sc. Thesis, Department of Electrical Engineering, University of Isfahan Technology, Iran.

Supangat, R., N. Ertugrul, W.L. Soong, D.A. Gray, C. Hansen and J. Grieger, 2005. Broken rotor bar fault detection in induction motors using starting current analysis. European Conference on Power Electronics and Applications, pp: 11-14.

Yazidi, A., H. Henao and G.A. Capolino, 2005. Broken rotor bars fault detection in squirrel cage induction machines. IEEE International Conference on Electric Machines and Drives, May 15-18, pp: 741-747.

Zhang, Z., Z. Ren and W. Huang, 2003. A novel detection method of motor broken bars based on wavelet ridge. IEEE Trans. Energ. Convers., 18: 417-423.