Research Journal of Applied Sciences, Engineering and Technology 4(19): 3641-3645, 2012
ISSN: 2040-7467

Submitted: February 13, 2012 Accepted: March 24, 2012 Published: October 01, 2012

A Novel Semi-Adaptive Routing Algorithm for Delay Reduction in Networks on Chip

Behnam Golvardzadeh and Pouya Derakhshan-Barjoei
Department of Electrical and Computer Engineering, Naein Branch, Islamic Azad University, Naein, Iran

Abstract: Increasing of operating frequency of CPUs and using of modern architectural in design of them, has caused ten times more powerful of a modern CPUs in processing due to the previous CPUs. Being a network of processors on a chip, is new architecture that is rapidly developing in modern systems. Networks on the chip are as a good way for the wire scheme to achieve high performance. The purpose of this study is to study and evaluation of existing routing algorithms in Network on Chip (NoC), present new routing algorithm based on the combined firm and adaptive routing algorithms and then comparison between amount of delay and the ability of this algorithm with existing routing algorithms have been presented.

Keywords: Delay, network on chip, routing algorithm, throughput

INTRODUCTION

Nowadays all the devices and equipment are becoming automated rapidly. In other words, there are large amounts of data in any system that must be processed quickly until the system does the appropriate decisions in an acceptable time. Network-on-Chip or Network-on-a-Chip (NoC or NOC) is an approach to designing the communication subsystem between IP cores in a System-on-a-Chip (SoC). NoCs can span synchronous and asynchronous clock domains or use unclocked asynchronous logic. NoC applies networking theory and methods to on-chip communication and brings notable improvements over conventional bus and crossbar interconnections. NoC improves the scalability of SoCs and the power efficiency of complex SoCs compared to other designs. Research has been done on integrated optical waveguides and devices comprising an Optical Network-on-Chip (ONoC). The concept of NOC has been introduced as a solution for such systems. Indeed, a NOC is new communications infrastructure for SOC (Kumar *et al*., 2002). With advances in semiconductor technology, existence of high number of the transistor in a chip allows to designer that put the large number of IP with a lot of memory on a chip together. This IP can be DSP, CPU, processors, video stream, IO with high bandwidth, etc. Shared transition structure is not extensible and cannot make optimum use of the available band width. Since the technology is going towards smaller size and larger chips, wire method of IP becomes loss method. Wire delay is more than gate delay which will be caused problems such as synchronization in IP and significantly associated power and clock networks will be wasted too. This problem will be shown more with increasing frequency and decreasing size .Reducing of supply voltage will be decrease power consumption but error will increase instead. A solution of this problem is using the network on a chip. Networks have more bandwidth because of the ability to communicate between multiple simultaneous IP (Benini and micheli, 2002). Switching techniques is also one of the factors is the amount of delay and power networks. Save and Send in switching technique, initially package off the path in the buffer storage and the destination address extracted from header, then according to the destination address and routing algorithm the destination is routing. This method required a minimum size of a buffer is closed, due to high volume of buffer required, usually in the NOC is not used. Switching method of creep in, not required that all packages be stored in the router, but depending on the small unit called the Fleet is divided into a header Fleet Upon reaching a router, routing will beginning and package to the output port is sent. In this way, in fact, a pipeline in Fleet created and distributed package to the router is placed. In this way against the possibility of reducing the size of the buffer deadlock increases.

In this study we will discuss existing routing algorithm and in this regards, the authors tends to propose a novel routing algorithm. Comparison with existing techniques demonstrate that the proposed method provides promising results.

Corresponding Author: Behnam Golvardzadeh, Department of Electrical and Computer Engineering, Naein Branch, Islamic Azad University, Naein, Iran

ROUTING ALGORITHM

One of the major problem in network on a chip is routing which has a significant effect on speed and power of network. A routing algorithm has a considerable impact on buffer consumption rate, routing logic, the number of steps to achieve a pocket to the target, the number of links in this route and creating a deadlock and blocked packets will lose the time, then it is effective on delay and power of network. So choosing an appropriate routing algorithm in the network is a very important issue. The logic is simple routing algorithm implementation of more appropriate and would be less delay.

Routing algorithm based on three different subject categories that are:

- Justify the conclusion is where routing.
- How to make a path for routing is selected.
- Length Routing results in two parts: source routing and distributed routing is determined. Source routing the entire path is determined by the source switch and when each router, the packet receives its path marked by the same switch and depending on the route will be sent.

The routing of header, each packet header routing information can be kept straight. This action increases the packet size (Ni *et al*., 1993). In distributed routing, the path at any given moment is determined by network traffic. Routing algorithm, switching path between the source and destination sets. A good routing algorithm should be free of deadlock, is wandering and starvation (Benini and Micheli, 2002; Ni *et al*., 1993). May deadlock cycle as a dependent, among nods have resources that should be requested, so no action is not carried forward (Moraes *et al*., 2003). Wandering means is that depending on the network are moving, but nothing useful move towards the destination node is not performed (Mello *et al*., 2003).

According to how path is specified, routing algorithms are divided in two definite and adaptive algorithms. In certain routing paths: from the beginning, all source nodes to target nodes and the packets of the same pathways as determined by the destination node are sent. In adaptive routing paths at any moment according to network traffic are identified and the packet is sent to the same direction (Ni *et al*., 1993). Deadlock states, wandering and starvation may have occurred in the adaptive algorithms.

By considering the length criteria, routing can be minimized or non-minimum (Benini and Micheli, 2002; Ni *et al*., 1993). In minimum routing, shortest path between source and destination guarantees (Mello *et al*., 2003). In Non-minimum routing algorithm routing flexibility will be more, but this will deadlock occurred, causing losing time and delay in getting packet to the destination node.

XY routing algorithm: XY routing algorithm, is one of the most discussed algorithm in the NOC. Implementation of this algorithm is simple and free from deadlock. In networks based mesh topology, each node address pairs to sort (Y and X) which consider the coordinates of mesh nodes. The Performance of routing algorithms XY is used that the packet first for X routing will mean if the coordinates X target smaller than X knots current is close to the left and if the coordinates of X from X knot current is greater, it be send to the right. If they (x) are equal the packet will be routing in the Y direction and based on comparison with Y the previous node will be sent to up or down (Lahtnen, 2004).

Odd-even turn model routing algorithm: This algorithm is one type of semi-adaptive algorithm. Couple-single turns routing algorithm that is designed for two-dimensional mesh network which can be also imposed it in circular mesh network. Suppose a two-dimensional mesh K0×K1 that any knots in it is identified by a binary vector (X0, X1), X0 is called coordination of zero dimension and X1 coordination of 1 dimension. We named four sides of net with the name of the West (W), East (E), North (N), South (S).

So overall, there are eight types of spin include ES, SE, EN, NE, WS, SW, WN and NW. It will be said couples a column (single) in a two-dimensional mesh network, if the dimension coordinates is an even (odd).

The main idea of single-couple turns routing algorithm is on the basis of limitation of rotation position and thereby without using of virtual channels, is prevented appearing of deadlock. Methods In this manner, the node which are in the couples column, depending no one can have a rotation of EN and ES and also in nodes which are located in the single columns, pockets cannot spin NW and SW have (Ascia *et al*., 2008).

DYAD routing algorithm: In the low rate traffic networks on a chip, certain algorithms such as XY-have lower average packet delay, than single-couple rotate routing algorithm, but in high traffic rates, this is contrary. In DyAD routing algorithm, tries to use the advantage of certain algorithm in a low traffic rate and the advantage of routing algorithms rotation couples in high traffic rates to be used simultaneously.

Routings which use of this algorithm, according to the network conditions at any moment use one of the two algorithms above. But the problem here is that it is

possible at any moment a number of routers use of the XY routing algorithm and some other use routing algorithms spin pair-odd. This may be caused deadlock in the network and the network delay is extremely high. To solve this problem instead of routing algorithms XY, couple-single routing algorithms can be used with the condition of eliminated compatibility of algorithm. For example when a package using the spin pair-single can be both P1 and P2 side we always go either way, for example, we used P1.

In this way we will have a routing algorithm that first is specific type and secondly the odd and even laws are respected. As a result of these algorithms simultaneously using new routing algorithm, rotation couples-single can be use benefits of certain algorithms and routing algorithms rotation odd-even simultaneously benefit not being worried about the stalemate in the network (Hu and Marculescu, 2004; Derakhshan, 2011).

I/XY ROUTING ALGORITHM

If we can providing a solution in the XY routing algorithm which the number of decisions needed for routing the path decrease can be expected that the amount of delay in the network significantly reduced. For this purpose the following algorithm is presented.

As in the previous section were presented, a packet is including the address of source and destination address and some other information. According to the mesh topology and that each node has coordinate as (x, y), in routing algorithm, I/XY reduce number of decisions in the path of the packet transmission. If we consider X_{count} as variable of x of origin and destination and Y_{count} as variable y of origin and destination, then:

$$X_{count} = \text{Destination.X} - \text{Source.X} \quad (1)$$

$$Y_{count} = \text{Destination.Y} - \text{Source.Y} \quad (2)$$

$$\text{Routing par} = X_{count} \times Y_{count} \quad (3)$$

by considering positive or negative of Routing Par can make a decisions about the packet transmission as follow:

- If this value is zero, then the origin and destination are located in one direction
- If this value is negative, can be inferred given path is one of the following

  send packages to the first left (by X_{count}) and then down (by Y_{count})
  send packages to the first right (by X_{count}) and high (based on Y_{count})

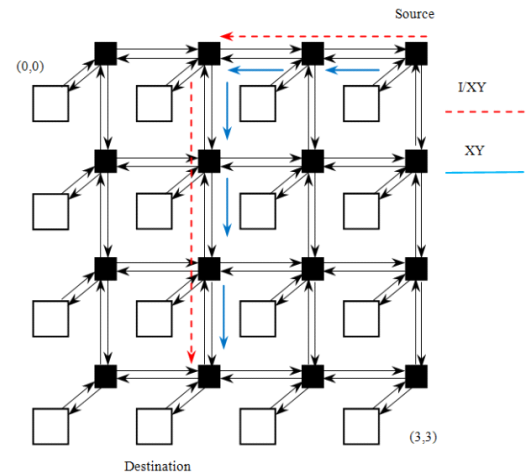

Fig. 1: XY routing algorithm performance

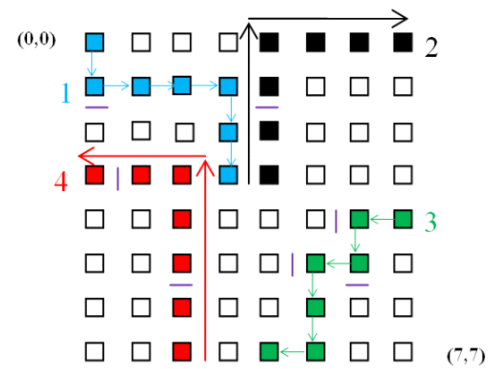

Fig. 2: Proposed algorithm performance

- If this value is positive can be represented one of the following:

  send packages to the first left (by X_{count}) and high (based on Y_{count})
  send packages to the right (based on X_{count}) and then down (by Y_{count})

According to Fig. 1 assume node (0, 3) send a packet to the destination (3, 1). Then the variable value X_{count} will be 2 and variable Y_{count} value will be 3. Because the Sign parameters such of Routing Par is negative, the result can be easily closed with the desired two decisions that led to the desired destination point it is shown clearly in Fig. 1. Figure 1 also represents the XY routing algorithm performance is the same for the origin and destination.

Proposed routing algorithm: As can be seen in Fig. 2 the proposed algorithm performance in this way is that if $Y_d > Y_s$ the packet wants to move south (lanes 1 and 3). In this case, depending on the agreement and according to

the directions of traffic on the South or West or East moves to reach its destination, but considering the shortest path (i.e., each node picks a direction that The destination is close.) But if the packet $Y_s \geq Y_d$ wants to move north (Routes 2 and 4).

In this case, the packet according to the certain algorithm routing I/XY, will rotate. So that first, it move to the north then to East or West according to the node address the target moves with the difference that the algorithm I/XY number of decisions for packet routing is far less than the number in the algorithm is XY, so the packet with fewer number of decisions reaches its destination and therefore the amount of delay caused by packet routing and transfer to the XY cut algorithm will reduce.

First transpose traffic: If a n×n mesh network be under the traffic pattern of the first type of inversion, a processing element in position (i, j) so that i and j belong to interval (0, n), its message can only send to element Processor with address (n-1-i, n-1-j). This type of traffic pattern is exactly like matrixes transpose Moraes *et al*. (2003). Property of this type of traffic is steady traffic on the photos that have the same traffic distribution, traffic distribution in this type of pattern is not uniform and can be stated that in the central parts of mesh network traffic rate has its highest value and thus the probability that routing network that are near the center, be critical spot are high.

EVALUATION PERFORMANCE OF ROUTING ALGORITHM PRESENTED

To assess the performance of routing algorithms presented, four routing algorithm implementation and the results were compared with each other. The routing algorithms are XY, Odd-Even, DyAD and proposed routing algorithm. We simulate the proposed routing algorithm and for comparing it with more of the existing algorithms in terms of delay and transition feature of the simulator, we used Noxim. This simulator unlike other similar instruments is designed in form of networks dedicated to working on NoC. The above simulator software is open source. One of the features of this simulator software, ability to define and create a routing algorithm in the context of the program. The programming language of this simulator is C++ and work in LINUX operating system.

For better comparison of presented algorithm with other algorithms, a mesh topology NoC with dimensions 8×8 in Noxim simulated and proposed algorithm as a routing algorithm that has been implemented. One of the considered discussion in routing algorithms problem is,

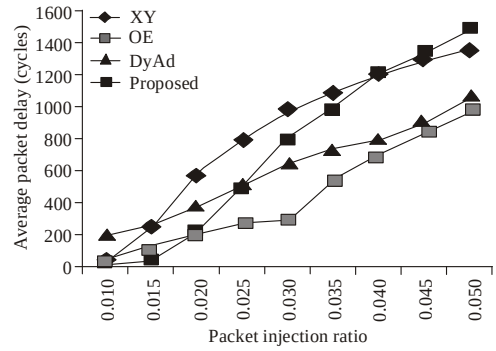

Fig. 3: Average packet delay

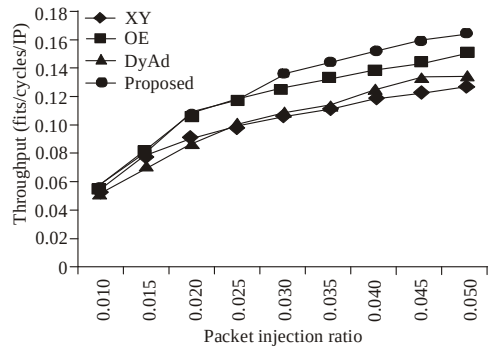

Fig. 4: Throughput

the amount of delay and the ability transition of algorithms in the network which minimize delay and maximum functionality transition packets in the network

As shown in Fig. 3, the place where the average of injected packet in the network is low, proposed routing algorithm perform better than other and this proposed routing algorithm, has the lowest rate of average delay algorithms in a high rate of network traffic.

It explained that in systems which are base on transfer message, the transition ability can be defined as follows:

$$TP = \frac{(TMC) \times (Message\ Length)}{(Number\ of\ IP\ block) \times (Total\ Time)}$$

TMC which means that the total number of messages at once implemented successfully reach their destination. Message length is based on Fleet. Total run time is simply the time between production and the first message received by latest count clock cycles.

Figure 4 shows transfer feature of different packages that depending on traffic pattern type 1 in a 8*8 network. As shown in Fig. 4, the proposed routing algorithm has better performance in comparing with other three routing algorithms Odd-Even, DyAD and XY return traffic pattern under the first type, the proposed routing

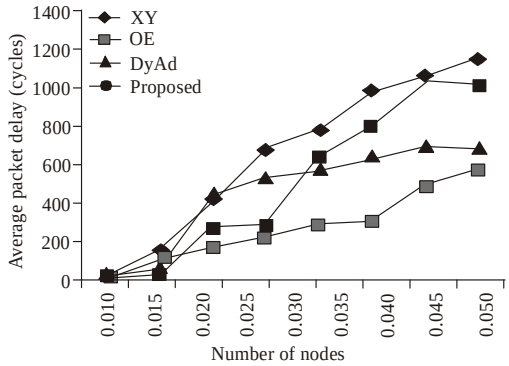

Fig. 5: Average packet delay

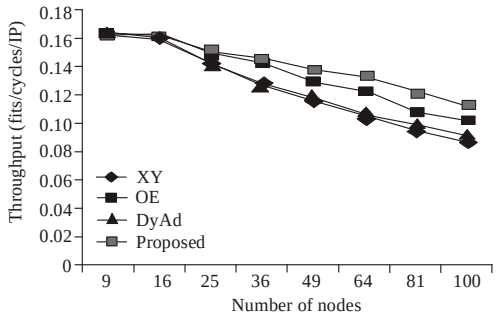

Fig. 6: Throughput

algorithm has the more ability to pass In different rates depending on injection.

Figure 5 and 6, show the performance of proposed routing algorithm and other three routing algorithm under the transpose traffic pattern. Figure 5 compares packet latency and Fig. 6 compares the average throughput between algorithms.

As Fig. 5 and 6 are shown, respectively, charts and graphs of average packet delay receiving and transition capabilities in various aspects of network packets is shown. as the simulation results suggests the proposed algorithm has better performance than other algorithms.

CONCLUSION

In the return traffic pattern as expressed before, the possibility creation of critical spots in the central parts of the network will increase. Now if the rate of packet production goes up, there is considerable crowded in most areas of the middle. Now if by using of the proposed router, because both areas and in other parts of the crowd, matching algorithm is proposed based on adaptive algorithms and the actual traffic patterns, such as inversion pattern, better work and also using the algorithm Non-shortest path routing critical spots in the neighborhood is used, the probability of packets being sent to these areas will be less. If the reduced congestion critical spots, traffic will be aired on the network, it is prevented from concentrating and finally, packet transfer delay from origin to destination is reduced. Soil NOC will be the most important traffic control future development program. Our next goals are: review the proposed algorithm and simulation in various network topologies on the chip by using different traffic patterns.

REFERENCES

Ascia, G., V. Catania, M. Palesi and D. Patti, 2008. Implementation and analysis of a new selection strategy for adaptive routing in network-on-chip. IEEE Trans. Comput., 57(6).

Benini, L. and G.D. Micheli, 2002. Network on chip: A new paradigm for system on chip design. In Proceedings Design, Automation and Test in Europe Conference and Exhibition.

Derakhshan, P., 2011. Modified spectrum sensing and awareness in wireless radio networks. IREMOS, 4(2).

Hu, J. and R. Marculescu, 2004. DyAD smart routing for network on chip. Proc. ACM/IEEE Design Automation Conf., pp: 260-263.

Kumar, S., A. Jantsch, J. Soininen, M. Forsell, M. Millberg, J. Oberg, K. Tiensyrij and H. Ahmed, 2002. A network on chip architecture and design methodology. Proceedings of IEEE Computer Society Annual Symposium of VLSI (ISVLSI.02).

Lahtnen, V., 2004. Design and analysis of interconnection architectures for on-chip digital systems. PhD. Thesis, Tampere University of Technology.

Mello, A.V., L.C.O. St, F.G. Moraes and N.L.V. Calazans, 2003. Evaluation of routing Algorithms on Mesh Based NoCs. PUCRS, Av. Ipiranga.

Moraes, F.G., N. Calazans, A. Mello, L. Möller and L. Ost, 2003. HERMES: Aninfrastructure for low area overheadpacket-switching networks on chip. Integrat. VLSI J., (accepted for publication).

Ni, L.M. and P.K. McKinley, 1993. A survey of wormhole routing techniques in direct networks. IEEE Comput. Mag., 26(2): 62-76.