Research Journal of Applied Sciences, Engineering and Technology 4(19): 3732-3739, 2012
ISSN: 2040-7467

Submitted: March 03, 2012 Accepted: March 24, 2012 Published: October 01, 2012

Machine Learning in Parliament Elections

[1]Ahmad Esfandiari, [2]Hamid Khaloozadeh, [3]Mojtaba Esfandiari and [1]Zahra Jafari Fard
[1]Department of Computer Engineering, Islamic Azad University, Sari Branch, Sari, Iran
[2]Department of Electronic Engineering, K.N. Toosi University of Technology, Tehran, Iran
[3]Department of Human Sciences, Islamic Azad University, Sari Branch, Sari, Iran

Abstract: Parliament is considered as one of the most important pillars of the country governance. The parliamentary elections and prediction it, had been considered by scholars of from various field like political science long ago. Some important features are used to model the results of consultative parliament elections. These features are as follows: reputation and popularity, political orientation, tradesmen's support, clergymen's support, support from political wings and the type of supportive wing. Two parameters of reputation and popularity and the support of clergymen and religious scholars that have more impact in reducing of prediction error in election results, have been used as input parameters in implementation. In this study, the Iranian parliamentary elections, modeled and predicted using learnable machines of neural network and neuro-fuzzy. Neuro-fuzzy machine combines the ability of knowledge representation of fuzzy sets and the learning power of neural networks simultaneously. In predicting the social and political behavior, the neural network is first trained by two learning algorithms using the training data set and then this machine predict the result on test data. Next, the learning of neuro-fuzzy inference machine is performed. Then, be compared the results of two machines.

Keywords: ANFIS, machine learning, back-propagation learning algorithm, hybrid learning algorithm, neural networks, parliamentary elections

INTRODUCTION

Consultative parliament is considered a powerful and sensitive pillar in many countries and plays an important role in determining the general policies. It is very difficult and complicate to predict the results of parliament elections. Different organizations and bodies like town governorships use different methods which most of them are based on statistical methods. They start to count and survey different people a few months before the elections considering the conditions affecting it. They estimate election results using traditional and statistical methods (Esfandiari, 2009; Esfandiari and Khaloozadeh, 2009).

Intelligent methods have not yet been used to predict parliament elections results. But recently, in United States used intelligent methods to model and predict the presidential elections. Neural networks were used for this job by Gorban and waxman (1995). The model used in Gorban and waxman (1995) was based on 12 Yes-No binary questions and answers. Their train data included the elections from 1860 to 1980. In 2000 nonlinear models including nonlinear dynamic systems, neural networks and symbolic dynamics were suggested for elections (Doyle, 2000)

Also, neural networks were designed to predict the US election results in 2001 and 2005 in Borisyuk (2002) and Borisyuk (2005) Their neural network input was the answers of experts to a collection of 11 questions and their output was the winning party. In Borisyuk, (2002) train data was collected from the election results in 1835-1997 and their test data was related to 1998-2001 and to bring the model up to date, 2001 election data were added to the training set in Borisyuk (2005).

In Royes and Bastos (2001) in 2001, fuzzy concepts were used for political issues. And at last in Jiao *et al*. (2006) in 2006, fuzzy adaptive networks were designed for the prediction of the result of the US presidential elections.

Artificial intelligence is used in most calculation areas. Its main feature is capability in learning and predicting real outputs. The concept of machine learning started since working in an area of artificial intelligence. It aims to study models which can be designed intelligently and developed to an extent witch changes into a secondary nature like humans. Learning involves in a vast area of science such as mathematics, statistics, engineering, computer, physics, biology and etc. The objective of machine learning is to train it a lot to learn the most complicated algorithms or the most nonlinear phenomena that reaches man and act like humans while confronting its environment and its effects (Esfandiari, 2009; Esfandiari and Khaloozadeh, 2009).

Corresponding Author: Ahmad Esfandiari, Department of Computer Engineering, Islamic Azad University, Sari Branch, Sari, Iran

Table 1: Examples of elections data of parliament

Row	Popularity	Political orientation	Tradesmen's support	Clergymen's support	Support from political wings	Type of supportive wing	Result
1	78	-1	28	25	1	-1	65
2	80	1	40	63	1	1	70
3	75	0	85	55	0	0	68.7
4	81	-1	31	32	1	1	69.3
5	74	1	55	57	1	1	62.4
6	79	1	50	80	1	1	66.3
7	81	1	51	82	1	1	63.1

Learning can be carried out in one of these ways: supervised learning, unsupervised learning and reinforcement learning (Hagan *et al*., 1996). There is a clear and distinct pattern of real and desirable outputs available in supervised learning. And the machine can be trained considering the existing patterns. Neural networks are one of the basic concepts concerning artificial intelligence and machine learning.

Fuzzy method is another of intelligent way. Neuro-fuzzy inference machine is combination of the two above methods. These two methods have been used to predict the results of parliamentary elections in Iran.

In this study, our aim is using the intelligent methods of neural networks and neuro-fuzzy to predict the results of parliament elections. We predict the results of Iran Islamic consultative parliament elections in Sari constituency. Features affecting the elections are the inputs of intelligent machines. These features were recognized as the most important features by the governorship in Sari. They gave us the values of these features. Data was collected for 517 candidates who took part in the previous elections. The data related to six features of the candidates were considered as the input parameter and the elections result as the output. The results are described as a percentage of the votes collected by candidates. Some of these data are shown in Table 1.

PARLIAMENT ELECTIONS

Public participation in the process of electing political elites is one of the basic properties of democratic and republic systems. Among the different types of power transfer, the most prominent way of power transfer is peaceful public elections. Elective participation is the most important political behavior in stable democratic countries. Non-peaceful methods are not used for the transfer of political power in these countries but their most important activity is to participate and vote in elections (Shahidinia, 2000). People today are not motiveless and unaware of political and social users like those in the past (Amirarjemandi, 2002).

During elections, voters' behavior as a political action in a social system has been among the important issues in political science, sociology and political sociology and many intelligentsia and thinkers focused on. In democratic countries, much research has been done on this subject due to long experience of democracy and elections but Iran is poor in research like this due to little experience of democracy and lack of election traditions (Darzi, 2003). We witnessed different democratic elections and suitable experience after the victory of the Islamic revolutions in 1979 and the formation of religious democracy.

People (voters) play a major role in electing parliament lawmakers during elections and election campaign. These elections are influenced by some factors which can be classified as structural factors of the society, cultural factors, economic factors, psychological factors and etc (Darzi, 2003). The important point we should consider is that the features of candidates in each city and the role of these features in their success in the elections should be studied.

Different functions have been defined for elections including election among the candidates and plans, increasing the feeling of responsibility among political elites, establishing relationship between people and government and strengthening and protecting political legitimacy and etc (Mousavi, 2004).

Predicting the results of parliament elections is a difficult and complicated problem. Various organizations use different ways which most of them is based on statistical methods. They start counting and survey different people a few months before the elections considering the conditions affecting it. They estimate election results using traditional and statistical methods.

Parliament elections are held separately in each constituency. Each constituency includes a big city which is divided into smaller cities, towns and villages. In some cases, two small towns may combine to form a constituency. The way in which a constituency is determined for voting, has a direct relationship with the population of each constituency.

The number of members elected among the various candidates is determined referring to the population of the constituency. For example 30 members in Tehran, 5 members in Mashhad and 2 members in Sari are elected. (Of course the number may change every few years under certain conditions).

Under Iranian constitution, candidates should register in Ministry of the Interior during the fixed period and the guardian council should confirm them. The council studies their qualification politically, socially and morally and etc. For example they will not be confirmed by the

council if they have moral problems. The candidates should be elected after confirmation. Each candidate should obtain 51% of the votes for being elected (Esfandiari, 2009).

Various statistical organizations considered different factors and variables for the prediction of election results. Governorships use different factors for this job. Since parliament elections results are predicted in this study, factors affecting elections collected by the governorship in Sari were used.

Features affecting elections: Since predicting election results and detecting public behavior and their interests as an election action is influenced by various and complicated factors, it is not possible to determine the features easily. People election is affected by their behavior which is very complicated. So it is difficult and ambiguous to predict people behavior. The careful determination of the variables and features affecting elections and their values are among the problems facing us. Since there is much experience in parliament elections, it is not impossible to detect the elective behavior (Esfandiari, 2009).

We studied the research done by different organization and concluded that about 20 features can be examined for the prediction of parliament elections. 6 features affect elections more than others (Esfandiari, 2009; Esfandiari and Khaloozadeh, 2009).

Popularity: Obtaining the votes of the people and gaining popularity is the main obsession of candidates for the participation in elections. Gaining popularity in the public opinion is always the most important feature in elections. If a candidate is popular among people, undoubtedly he will win the election campaign. This feature is not easy to obtain. There are different reasons for this feature which we cannot still study it. In fact the final aim of candidates in pre-elections campaigns is to gain popularity (Esfandiari, 2009; Esfandiari and Khaloozadeh, 2009; Mousavi, 2004).

Political orientations of candidates: The existing political orientations in Iran are divided into two main political wings: Fundamentalists (right wing) and Reformists (left wing). These two political orientations were formed during the first parliament elections. They have many things in common in connection with the revolution principles and adhesion to the Islamic constitution. They also have differences. The fundamentalist wing pays more attention to the religious and revolutionary principles and the Reformists believe in reforms in some issues (Esfandiari, 2009; Esfandiari and Khaloozadeh, 2009; Mousavi, 2004).

Guilds and tradesmen's support: One of the most effective features in elections in Sari is the guilds and tradesmen's support. This support is effective in a candidate success in several reasons. They can play a major role in elections with the financial and economic support they provide. The candidate with more effective campaign can make himself better known to people and this requires suitable economic situations. Since most businessmen are rich they can be a suitable supporter.

Those subjects mentioned above are very influential in markets because they have direct contact with people. The results of the previous parliament elections in Sari show that the candidates who enjoyed the support of these people were successful in the elections (Esfandiari, 2009; Esfandiari and Khaloozadeh, 2009).

Clergymen's support: The previous elections results show that people in sari and generally people in Mazandaran listen to prominent clergymen and religious scholars. Many people accept their ideas and if they support a certain candidate, certainly many voters will vote for him.

The high respect of the people in Mazandaran for clergymen, in comparison with other constituencies in Iran originates in their history and culture. Mazandaran formed the first Shiite government (the faith of the current majority of people in Iran) in the Islamic world. If we take a look back to the results of 8 previous parliament elections in the constituency of Sari, we realize that clergymen support for a certain candidate has changed the election results surprisingly to the advantage of the candidate (Esfandiari, 2009; Esfandiari and Khaloozadeh, 2009).

Support of political wings: If candidates enjoy the support of well-organized political wings they will succeed more in obtaining votes and gaining popularity. They can have a better place if political wings support them economically and politically. They can enjoy some advantages using this factor that other candidates do not (Esfandiari, 2009; Esfandiari and Khaloozadeh, 2009).

Type of supporting wing: Another feature affecting election results is the political wing supporting a certain election candidate. In fact this feature results from the performance of the ruling government during the elections. It depends on the performance of the government and public satisfaction. Sometimes a candidate is elected which his supporting wing is in power. In fact these voters believe that parliament and government should be in agreement. They may have certain reasons for their choice or they may think the same way as the supporting wing and government do.

Sometimes people elect a candidate that disagrees with the government. Of course this disagreement between the candidate and the then government holds about the two main political orientations which mentioned above. Some people may vote for a candidate who disagrees with government because they are not satisfied with the government ruling during the elections. If a candidate does not enjoy the support of any wings he will be independent (Esfandiari, 2009; Esfandiari and Khaloozadeh, 2009; Mousavi, 2004).

ARTIFICIAL NEURAL NETWORKS

Today, Neural Networks (NN) are widely being used to achieve a competence like humans especially for pattern recognition and system detection. These networks are made up of a number of nonlinear calculation elements which act in a parallel way. The main feature of neural networks is that they can learn the environment and improve their efficiency during learning (Mandic and Chambers, 2001; Haykin, 1999). There are different models of neural networks and the most important of them is multilayer feed forward neural network. In this network each input connects to all nodes of the first hidden layer and each node in the middle hidden layers connects to the nodes of the next layer. Input signals propagate from one layer to the next layers. Multilayer feed forward neural network are trained using back propagation algorithm (Hagan *et al*., 1996; Temurtas *et al*., 2009; Narasinga, 2010). These supervised networks require real and desirable responses. These networks learn how to convert input data to real responses. They can approximate each input-output mapping with one or two layers. Finally a collection of outputs is formed as the response of the network.

The following formula determines the activity of the interior surface of the neuron (net):

$$net_j = \sum_{i=1}^{n} w_{ji} x_i + w_{j0}, \; i = 1, 2, \ldots, n; \; j = 1, 2, \ldots, 1 \quad (1)$$

And the following output is formed:

$$y_j = f(net_j) \quad (2)$$

where, Wij is connection weight of input-output nodes, W_{j0} is bias weight, X_i is input vector, Y_i is neuron output and f is activation function.

Each processing unit has an activation function which is found in different types. If we use a sigmoid function, then:

$$f\left(net_j\right) = \frac{1}{1 + e^{-(net_j)}} \quad (3)$$

Error back-propagation learning method minimizes network errors using gradient descent. It is done using chair rule derivation and by updating weight parameters. Performance measure E which indicates the final error network is shown:

$$E = \sum_{p=1}^{n} \left(\tfrac{1}{2} \sum_{k=1}^{m} (d_{pk} - y_{pk})\right)^2 \quad (4)$$

where, n is number of input data, m is number of neurons in output layer, dpk is amount of desired output of kth neuron for pth input datum and ypk is amount of network output with kth neuron for pth input data (Koroglu, 2009).

Weights are updated based on learning algorithm to minimize E. learning objective is to obtain the updated weights of all network layers by minimizing function E. This error as mean square calculates the differences between the output amounts of the network and the desirable output for all patterns.

Training is as an inseparable part of a neural network. Several algorithms have been introduced recently to train neural networks. These algorithms are mainly based on the standard method of error back-propagation. They differ in their performance and convergence speed. For example, we can name the learning algorithms Quasi-Newton, Levenberg-Marquardt, resilient back-propagation and different algorithms of conjugate gradient such as Fletcher reeves, Polak-Ribiere, Rowel-Beale and scaled conjugate (Demuth and Beale, 2001).

NEURO-FUZZY MACHINE

Neuro-fuzzy machine is a trainable adaptive network that allows the possibility of using neural networks and fuzzy logic. It not only has the characteristics of both methods, but it also eliminates some of their disadvantages.

ANFIS (Adaptive Network-based Fuzzy Inference System) is the famous hybrid neuro-fuzzy network for modeling the complex systems (Jang, 1993). Both artificial neural network and fuzzy logic are used in ANFIS architecture. In fact, ANFIS is a first order of Sugeno fuzzy model that has a form as feed-forward network structure. Figure 1 shows an ANFIS network with two inputs, one output and four rules.

The ANFIS architecture in Fig. 1 has two inputs *x* and *y*, one output *f* and four rules. A typical rule set with base fuzzy if-then rules can be expressed as Jassar *et al*., (2009) and Dogantekin and Avci (2009):

$$\text{if } x \text{ is } A_1 \;\&\; y \text{ is } B_1 \text{ then } f = p_1 x + q_1 y + r_1 \quad (5)$$

where, p, r and q are linear output parameters.

This architecture made by using five layers (note that O_i^j is output of the ith node in j^{th} layer):

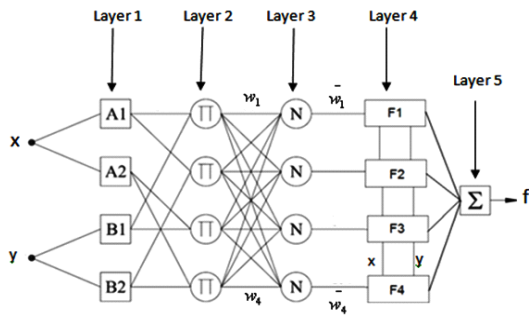

Fig. 1: ANFIS architecture of two inputs and four rules

Layer 1: Every node i in this layer is a square node with a node function:

$$O_i^1 = \mu_{A_i}(x) \tag{6}$$

where, x is the input to node i and A_i is the linguistic label (fuzzy sets: small, large, …) associated with this node function.

Layer 2: Every node in this layer is a circle node labeled Π which multiplies the incoming signals and sends the product out. For instance:

$$O_i^2 = W_i = \mu_{A_i}(x) \times \mu_{B_i}(y), i = 1, 2, 3, 4 \tag{7}$$

Each node output represents the firing weight of a rule.

Layer 3: Node *i* in this layer calculates the ratio of the ith rule's firing strength to the total of all firing strengths:

$$O_i^3 = \overline{W_i} = W_i / \left(W_1 + W_2 + W_3 + W_4\right), i = 1,2,3,4 \tag{8}$$

Layer 4: Every node in this layer is a square node with a node function:

$$\overline{W_i} f_i = \overline{W_i}.\left(p_i x + q_i y + r_i\right), i = 1, 2, 3, 4 \tag{9}$$

where, W_i is the output of layer 3 and $\{p_i, q_i, r_i\}$ is the parameter set. Parameters in this layer will be referred to as consequent parameters.

Layer 5: The single node in this layer is a circle node labeled Σ that computes the overall output as the summation of all incoming signals:

$$O_i^5 = \Sigma \overline{W_i}.\, f_i = \frac{\Sigma W_i f_i}{\Sigma W_i} \tag{10}$$

We have succeeded to implementation a fuzzy system that is capable of learning. The main training method of ANFIS is error back-propagation. In this method, using gradient descent algorithm, the error backward to the input and the parameters become correct. This method is exactly the same as error back-propagation method used in neural network.

The values of conclusion parameters can be obtained through least square method. By combining this method and back-propagation method we can obtain a hybrid training algorithm that has an effective search to find optimal parameters.

DATA COLLECTION

Election systems are inherently ambiguous and complicated. They cannot be determined easily by a series of numbers. This is ambiguous, because the type of the variables which has an effect on it and their values should be determined correctly. Since this is a human problem and resulted from human behaviors, it is difficult to determine the variables, their conditions and their values correctly. As stated above many features affect parliament elections which six properties mentioned are the most important. Table 1 shows the properties and their values for a few examples of the candidates who participated in the previous elections.

Five hundred and seventeen (517) data records concerning the candidates during seven parliament elections in the past in the constituency of Sari were collected. These properties and their values were obtained from the information and statistics unit of the city. The unit interviewed people in different placed and collected information before and after each parliament election. The properties related to candidates who won or lost in different elections.

The values concerning popularity, support from those engaged in market, support from clergymen and religious scholars is in the form of percentage. The values for political orientation are as follows: 1 for fundamentalism,-1 for reformism and zero for independent orientation.

Two binary values 0 and 1 were used for the support from political wings: 1 for candidates supported by political wings and 0 for other candidates. For the type of supporting wings: 1 for candidates supported by the supporting wing ruling the government, -1 for the opposition, 0 for independent candidates.

The results of the elections shown in the table are related to each candidate and in terms of the percentage of the votes obtained by each candidate. The data is divided into two classes of training and test data. We use training data to learn the machines and the test data to test them.

For data fitting problem with six input parameters is needed $10^6 = 1000000$ number of data samples. We have only 517 data samples. If all six parameters to be considered, and for any input parameter consider three membership function averagely, should be generate a fuzzy rule base consist of $3^6 = 729$ if-then rule and this requires a large memory and long computational time. To solve this problem using MATLAB toolbox and exhsrch function (Jang and Gulley, 1998) choose the inputs that have most impact on results.

The function exhsrch performs an exhaustive search within the available inputs to select the set of inputs that most influence the results. This function specifies the number of different combinations of inputs and builds an ANFIS model for each combination and trains it for one epoch and reports the performance achieved (Jang and Gulley, 1998; Jang, 1996)

In this problem, exhsrch is used to determine the one most influential input attribute in predicting the output.

Using this function, among six features, two parameters of popularity and the support of clergymen that have more impact in reducing of prediction error have been used as input parameters in implementation. Because these two features has minimum RMSE (Root Mean Square Error) than other features.

RESULTS AND DISCUSSION

Same data with similar condition are used for two methods of neural networks and ANFIS. Result obtained is compared with target values and other method too. In use of neural networks, among the various methods of error back-propagation learning algorithm, Levenberg-Marquardt, quasi Newton, Resilient and Scaled Conjugate Gradient methods are used. The difference of results, between the real output and the network output may change during the various training. Note that these results are not stable because randomly selection of weights and biases in the beginning of training. Figure 2 shows the difference in the outputs of neural networks with various learning algorithms.

For ANFIS training two algorithms of error back-propagation and Hybrid (error back-propagation and least squares error) algorithms have been used. For each of these networks, are used three Gaussian membership functions for each input and fuzzy rule grid partition method. It also is tested for different iterations. In Fig. 3

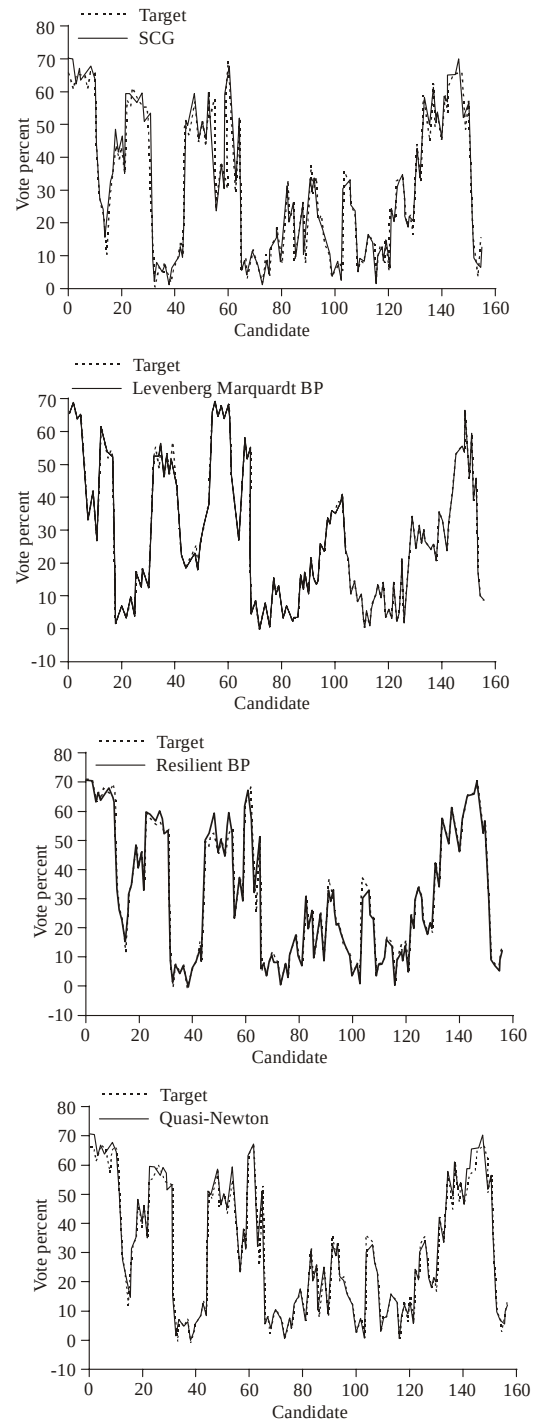

Fig. 2: Comparison of NN outputs with target output on testing data set

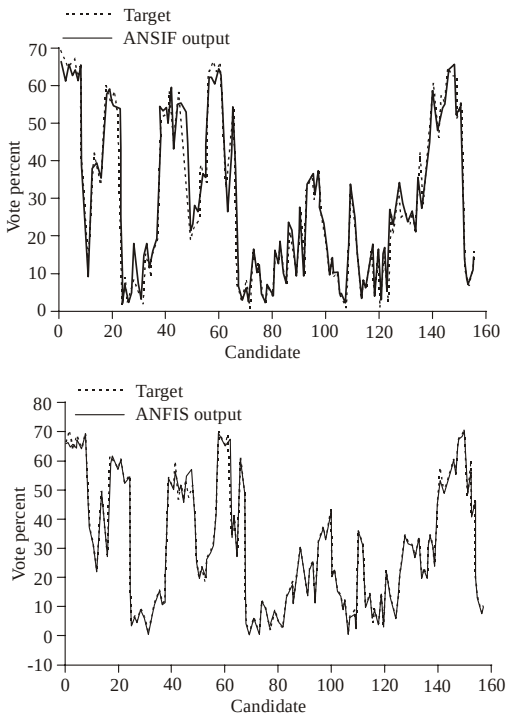

Fig. 3: Comparison of ANFIS outputs with target output on testing data set

Table 2: Comparison table

Row	Intelligent method	Learning algorithm	Epochs	MSE	MAE
1	NN	Levenberg-marquardt	15	0.0071	0.0542
2	NN	Scaled conjugate gradient	39	0.0049	0.0521
3	NN	Resilient back-propagation	42	0.0059	0.0538
4	NN	Quasi-newton	24	0.0060	0.0570
5	ANFIS	Back-propagation	30	0.0071	0.0599
6	ANFIS	Hybrid	10	0.0028	0.0477

is shown the difference between actual output and the output of ANFIS when using hybrid training algorithm.

Table 2 shows the training algorithms, number of training iterations, MSE and MAE values for each intelligent method of neural networks and ANFIS. This table shows also that all techniques were used had satisfactory results. Among the various neural networks, the best results are for the algorithm Scaled Conjugate Gradient that has been achieved MSE equal to 0.0049 and MAE equal 0.0521 in 39 epochs. Of course, Levenberg-Marquardt Algorithm has achieved MSE equal to 0.0071 and MAE equal 0.0542 in 15 epochs.

Among the results of ANFIS, best result is for hybrid training algorithm that in 10 epochs had MSE equal to 0.0028 and MAE equal 0.0477.

Also, in Total comparison between neural networks and ANFIS, it appears that, ANFIS with hybrid training algorithm has been better results to predict the results of parliamentary elections.

CONCLUSION

Predict the result of parliamentary elections is one of the most important problems in any democratic country. In this paper, neural networks and ANFIS have been used to predict the results of parliamentary elections. Both neural network model and ANFIS had relative success in predicting. According what can be seen from Table 2, the length of time learning in ANFIS is much less than neural network. This means that the ANFIS be converged faster to the actual output in comparison with the neural network. When there is a complex system with large data set, using ANFIS instead of the neural network is more useful to faster overcome the complexity of the problem. Results of neural networks with different algorithms are almost identical. ANFIS has less error than neural network and this is obtained in a smaller number of iterations. The results show that ANFIS with hybrid training algorithm is better than other methods to predict the results of parliamentary elections. Finally, the ANFIS can be used as an intelligent method to predict the results of parliamentary and presidential elections in any country.

REFERENCES

Amirarjemandi, A.M., 2002. The Adaptive Study of Majlis Elections Systems Compared with Common Election Systems. In Department of Political Sciences, Tehran University, Tehran.

Borisyuk, R., 2002. Forecasting the 2001 General Election Result: A Neural Network Approach. Retrieved October.

Borisyuk, R., 2005. Forecasting the 2005 general election: A neural network approach. Brit. J. Polit. Int. Relat., 7(2): 199-209.

Darzi, H., 2003. Election Sociology, Analyzing the Election Behavior of People in Markazi Province in 8th Majlis Elections. In Department of Political Sciences, Tehran University, Tehran.

Demuth, H. and M. Beale, 2001. Neural Network Toolbox: For use with MATLAB.

Dogantekin, E.A. and D. Avci, 2009. Automatic hepatitis diagnosis system based on linear discriminant analysis and adaptive network based on fuzzy inference system. Expert Syst. Appl., 36(8): 11282-11286.

Doyle, D.R., 2000. Political Complexity: Nonlinear models of politics. University of Michigan, Pr.

Esfandiari, A., 2009. Modeling and Predicting of Iran Islamic Consultative Assembly Results by Intelligent Approaches. in Department of Computer Engineering, Science and Research Branch Islamic Azad University, Tehran.

Esfandiari, A. and H. Khaloozadeh, 2009. Islamic Consultative Assembly Results Prediction using Machine Learning Methods. in 1st National Conference on Software Engineering Applications, Iran.

Gorban, A. and C. Waxman, 1995. Neural networks for Political Forecast. In Proceedings of the WCNN.

Hagan, M.T., H.B. Demuth and M.H. Beale, 1996. Neural Network Design PWS. Boston, MA.

Haykin, S., 1999. Neural Networks: A Comprehensive Foundation. Prentice Hall, Upper Saddle River, NJ.

Jang, J.S.R., 1993. ANFIS: Adaptive-network-based fuzzy inference system. IEEE T. Syst. Man Cy., 23(3): 665-685.

Jang, J.S.R., 1996. Input selection for ANFIS learning. Proceeding of the 5th IEEE International Conference on Fuzzy system, Tsing Hua university, Hsinchu, 2: 1493-1499.

Jang, J.S.R. and N. Gulley, 1998. Fuzzy Logic Toolbox: For Use with MATLAB: User's Guide.

Jassar, S., Z. Liao and L.Zhao, 2009. Adaptive neuro-fuzzy based inferential sensor model for estimating the average air temperature in space heating systems. Build. Environ., 44(8): 1609-1616.

Jiao, Y., Y.R. Syau and E.S. Lee, 2006. Fuzzy adaptive network in presidential elections. Math. Comput. Model., 43(3-4): 244-253.

Koroglu, S., 2009. An approach to the calculation of multilayer magnetic shielding using artificial neural network. Simul. Model. Pract. Th., 17(7): 1267-1275.

Mandic, D.P. and J.A. Chambers, 2001. Recurrent Neural Networks for Prediction: Learning Algorithms. Architectures and Stability, Wiley.

Mousavi, S.B., 2004. Criticizing and Syudying Majlis Elections in Iran. In Department of Political Sciences, Tehran University, Tehran.

Narasinga, M.R., 2010. A clinical decision support system using multi-layer perceptron neural network to predict quality of life in diabetes. Diabetes Metabolic Syndrome Clin. Res. Rev., 4(1): 57-59.

Royes, G.F. and R.C. Bastos, 2001. Fuzzy sets in political science. IFSA World Congress and 20th NAFIPS International Conference, Florianopolis, 2: 935-940.

Shahidinia, A., 2000. Factors Affecting Election Behaviors (Voting Priorities) of Voters in Kermanshah During the First and Fifth Majlis from the Point of view of the Experts from Kermanshah. in Department of Political Sciences. Shahid Beheshti University, Tehran.

Temurtas, H., N. Yumusak and F. Temurtas, 2009. A comparative study on diabetes disease diagnosis using neural networks. Expert Syst. Appl. Int. J., 36(4): 8610-8615.