Research Journal of Applied Sciences, Engineering and Technology 4(6): 571-580, 2012
ISSN: 2040-7467

Submitted: September 23, 2011 Accepted: October 16, 2011 Published: March 15, 2012

# Investigation of Energy Storage Devices Impact on Improvement of Power Quality Aspects

F. Gharedaghi, M. Deysi, H. Jamali and A. khalili
Dashtestan Branch, Islamic Azad University, Borazjan, Iran

**Abstract:** Energy production and storage are in the midst of some major changes. During the past decade, energy production and storage have become a high priority for business and government because of concerns relating to the environment and sustainability of energy sources. The power quality problems that have occurred on the existing, aging system will continue to worsen as intermittent, renewable energy systems are added. Fast-acting energy storage is required to help combat this problem. Among the many FACTS devices which can improve the power system operation and power quality problems, Static Compensator (STATCOM) and Unified Power Flow Controller (UPFC) are of the most promising new FACTS technologies. Both of these devices utilize capacitors as the dc bus. Since capacitors are passive elements with very limited energy storage, they cannot provide controllable real power for extended period. This paper investigates the impact of integrating a Battery Energy Storage System (BESS) and/or a Superconducting Magnetic Energy Storage (SMES) across the dc bus of STATCOM. This will allow fast control of both real and reactive power to improve power system transient stability and to provide extra damping against power system oscillation in a multi-area system linked by weak inter-connection. Comparative dynamic performances of these devices are presented in this study. A control strategy is proposed to integrate these devices to improve the active power management within the constraints of the power system to which the device is connected. The proposed controller based on hysterisis control ensures unity power factor and sinusoidal supply current irrespective of the variation in the load demand waveform and magnitude. Results from simulation studies using realistic model of the power electronic devices on the dynamic performance of these schemes will be presented.

**Key words:** BESS, power quality, SMES, STATCOM

## INTRODUCTION

The proliferation of non-linear loads and sources, using power electronic-based equipment, has led to undesired problems associated with power quality, which affects both utilities and their customers (Domijan *et al*., 1993). The increasing use of these non-linear devices to improve efficiency implies that the power quality issue will become a continuing important issue and requires an economic solution. The FACT technologies has enhanced the controllability and power transfer capability in ac system. Recently other important functions have been added to the FACTS devices, e.g., harmonic elimination and dynamic voltage regulation to cater for the power quality problems.

STATCOMs have received considerable attention for power utility applications to provide continuously controllable reactive power for voltage control replacing the traditional Static Var Compensators (SVC) due to their relatively simple design (Arsoy *et al*., 2001), (Hingorani and Gyugyi, 2000), (Watanbe *et al*., 1993), (Singh *et al*., 2000). Since the circuit of a STATCOM only consists of switching devices and capacitors, no active power can be provided. To provide both active and reactive power control, a long term energy storage device is required to replace the capacitors in STATCOM. The energy storage device can be either a bank of batteries or a high temperature super-conducting coil (Ise *et al*., 1986). The capability of controlling active as well as reactive power adds significant feature, which can be used effectively in application requiring power oscillation damping, leveling peak power demand, and providing uninterrupted power for critical loads. There are two ways of interfacing the energy storage devices to STATCOM at the dc terminals. They can be either connected directly across the dc bus (when battery is used) or to be connected to dc bus through regulating devices (when super-conducting coil is used). The dc chopper is mostly used for the control of the active energy flow between the super-conducting coil and the dc bus (Daugherty *et al*., 1993).

This study presents the results of our investigations of controlling a STATCOM with energy storage under different conditions for the power quality improvement.

**Corresponding Author:** F. Gharedaghi, Dashtestan Branch, Islamic Azad University, Borazjan, Iran.

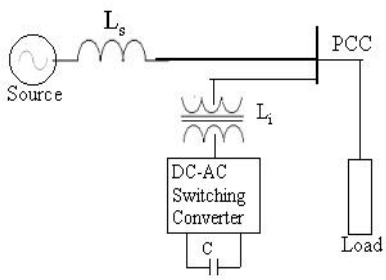


Fig. 1: A schematic circuit of STATCOM

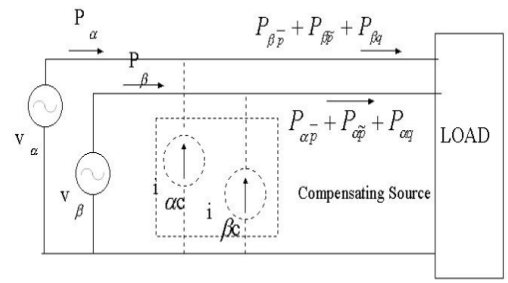


Fig. 2: Power flow with compensating component

The following two topologies are considered:

- STATCOM with batteries across the dc bus
- STATCOM with Super-conducting Magnetic Energy Storage (SMES) interfaced through dc chopper

## METHODOLOGY

**The operation of the scheme:** The basic circuit of the proposed STATCOM involves the shunt connected voltage source inverter connected across the power system as shown in the Fig. 1. It is coupled to power system through the inductors ($L_i$) representing the interfacing transformer. The source with line inductance ($L_s$) is connected to the load. The energy storage is connected across the dc bus of the inverter.

The primary control of the inverter is to regulate the reactive current flow through the STATCOM. Correcting the demand of reactive current in the inner loop regulates the output voltage of the inverter. The reactive current reference is obtained from the external loop by comparing the reference ac bus voltage with the actual voltage. The dc bus voltage is dynamically adjusted in relationship with the inverter voltage. The same circuit configuration can also compensate the harmonics generated by the load. The generalized theory of instantaneous power is used to control the reactive and harmonics compensation by the active filters.

If the three phase sinusoidal voltage supplying linear load, the voltages and currents transformed into α-β-o are written as:

$$v_\alpha \sqrt{3}\ V \sin \omega t \qquad i_\alpha \sqrt{3}\ I \sin(\omega t-\phi) \qquad (1)$$
$$v_\beta \sqrt{3}\ V \cos \omega t \qquad i_\beta \sqrt{3}\ I \cos(\omega t-\phi)$$
$$v_o = 0 \qquad i_o = 0$$

The powers p and q can be presented as:

$$\begin{bmatrix} p \\ q \end{bmatrix} = \begin{bmatrix} v_\alpha & v_\beta \\ -v_\beta & v_\alpha \end{bmatrix} \begin{bmatrix} i_\alpha \\ i_\beta \end{bmatrix} \qquad (2)$$

A simplified representation of a and b circuit is presented in Fig. 2 with compensating components of currents.

The power in terms of currents are represented as:

$$\begin{bmatrix} i_\alpha \\ i_\beta \end{bmatrix} = \frac{1}{\Delta} \begin{bmatrix} v_\alpha & -v_\beta \\ v_\beta & v_\alpha \end{bmatrix} \begin{bmatrix} p \\ q \end{bmatrix}; \Delta = v_\alpha^2 + v_\beta^2 \qquad (3)$$

Separating the functions of p and q:

$$\begin{bmatrix} i_\alpha \\ i_\beta \end{bmatrix} = \frac{1}{\Delta} \left\{ \begin{bmatrix} v_\alpha & v_\beta \\ v_\beta & v_\alpha \end{bmatrix} \begin{bmatrix} p \\ 0 \end{bmatrix} + \begin{bmatrix} v_\alpha & v_\beta \\ v_\beta & v_\alpha \end{bmatrix} \begin{bmatrix} 0 \\ q \end{bmatrix} \right\} = \begin{bmatrix} i_{\alpha p} \\ i_{\beta p} \end{bmatrix} + \begin{bmatrix} i_{\alpha q} \\ i_{\beta q} \end{bmatrix} \qquad (4)$$

where α and β components of the currents are:

$$i_{\alpha p} = v_\alpha p / \Delta \qquad i_{\alpha q} = v_\beta q / \Delta \qquad (5)$$

$$i_{\beta p} = v_\beta p / \Delta \qquad i_{\beta q} = v_a q / \Delta \qquad (6)$$

Then power in phase α and β can be separately written as:

$$\begin{bmatrix} p_\alpha \\ p_\beta \end{bmatrix} = \begin{bmatrix} v_\alpha i_\beta \\ v_\beta i_\alpha \end{bmatrix} = \begin{bmatrix} v_\alpha i_{\alpha p} \\ v_\beta i_{\beta p} \end{bmatrix} + \begin{bmatrix} v_\alpha i_{\alpha q} \\ v_\beta i_{\beta q} \end{bmatrix} = \begin{bmatrix} p_{\alpha p} \\ p_{\beta p} \end{bmatrix} + \begin{bmatrix} p_{\alpha q} \\ p_{\beta q} \end{bmatrix} \qquad (7)$$

where the power components are:

$$p_{\alpha p} = v_\alpha i_{\alpha p} = v_\alpha^2 p / \Delta \qquad (8)$$

$$p_{\alpha q} = v_\alpha i_{\alpha q} = -v_\alpha v_\beta q / \Delta \qquad (9)$$

$$p_{\beta p} = v_\beta i_{\beta p} = v_\beta^2 p / \Delta \quad (10)$$

$$p_{\beta q} = v_\beta i_{\beta q} = v_\alpha v_\beta q / \Delta \quad (11)$$

Therefore the three phase active power can be written as:

$$p_{3\phi} = p_\alpha + p_\beta + p_o = p_{\alpha p} + p_{\alpha q} + p_{\beta p} + p_{\beta q} + p_o = p_{\alpha p} + p_{\beta p} + p_o \quad (12)$$

from (9) and (11):

$$p_{\alpha q} + p_{\beta q} = 0 \quad (13)$$

These are all instantaneous values and valid for the steady state and transient conditions.

To compensate completely $p_{\alpha q}$ and $p_{\beta q}$, it is necessary to introduce the current sources i $\alpha_c$ and i$\beta_c$ such that:

$$i_{\alpha c} = i_{\alpha q} \text{ and } i_{\beta c} = i_{\beta q}$$

The power support required from this source is:

$$p_{\alpha q} = v_\alpha i_{\alpha q} \quad (14)$$

$$p_{\beta q} = v_\beta i_{\beta q} \quad (15)$$

Then the voltage source needs to supply only p $\alpha_p$ and $p_{\beta p}$ only. For all the instance the, Eq. (13) should be satisfied. Which means that the power necessary to compensate for $i_{\alpha p}$ is equal to the negative of the power necessary to compensate for $i_{\beta q}$.

The current source $i_{\alpha c}$ and $i_{\beta c}$ represent the active filter, that may be the conventionally controlled to generate $i_{\alpha q}$ and $i_{\beta q}$. There is no power flowing out or in to the dc source if the inverter is supported by any dc storage so no dc storage is necessary.

Under the nonlinear load to compensate the harmonics the p and q terms needs modifications:

$$p = \overline{p} + \tilde{p} \text{ and } q = \overline{q} + \tilde{q} \quad (16)$$

p and q$^-$ are the mean values, p and $\tilde{q}$ are the alternating components with mean value equal to zero:

$$p_{\alpha\tilde{p}} = v_\alpha^2 \tilde{p} / \Delta = v_\alpha i_{\alpha\tilde{p}} \quad (17)$$

$$p_{\beta\tilde{p}} = v_\beta^2 \tilde{p} / \Delta = v_\beta i_{\beta\tilde{p}} \quad (18)$$

$$p_{\alpha\tilde{p}} + p_{\beta\tilde{p}} \neq 0 \quad (19)$$

Therefore, to compensate for p $P_{a\tilde{p}}$ , there is no need of power supply inverters, however energy storage element is necessary. When energy storage element receives the energy $\tilde{P}$ , it is negative and when supplies, $\tilde{P}$ is positive. This compensation can be implemented with active filters based inverters controlling the currents given in the Eq. (17) and (18). The basic storage element, capacitor or inductor has to be implemented to store this active energy oscillation. It is imperative to have the storage element at the dc bus of the inverter to perform the reactive compensation and active filter duty. It is a matter of concern that the appropriate amount of energy storage value must be assigned to perform various duties.

One of the important control variable in the scheme suggested so far is the dc bus voltage. The level of dc bus voltage to be maintained must be more than 2 times the ac supply voltage. Invariably, the dc voltage under transient conditions always swings to its reference set value. The sudden increase or decrease in the demand of reactive/active power makes ac voltage at Point of Common Coupling (PCC) to change. The energy flow during this transient state takes time to meet the demanded losses of the inverter. Till the time controller correct the inverter output for the set values, the stored energy form the dc bus has to support the inverter losses. This is most important aspect of this investigation. The proposed method suggests making $V_{dc}$ as independent control variable so that dc bus voltage does not vary during any power system disturbances.

To adequately support the energy storage at the dc bus, device with appropriate capacity is required. The increase in capacitor rating may satisfy the above-mentioned requirements but the STATCOM will be restricted to its functional requirements. Adding more energy storage across the dc bus can enhance the functional requirements. This potential capability provides a new tool for enhancing dynamic compensation, improving power system efficiency and, potentially preventing the power outages.

Presently available sources of storage are Batteries Energy Storage Systems (BESS), Superconductor Magnetic Energy Storage (SMES) and ultra capacitor.

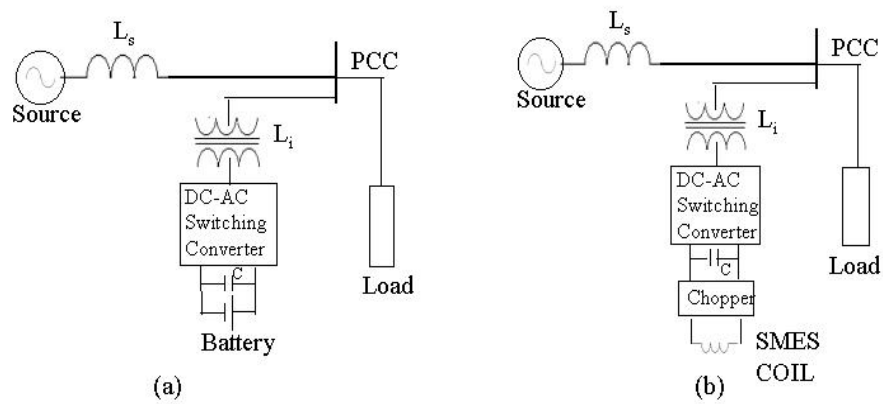


Fig. 3: (a) STATCOM with Battery Storage System (BESS), (b) STATCOM with Superconductor Magnetic Energy Storage (SMES)

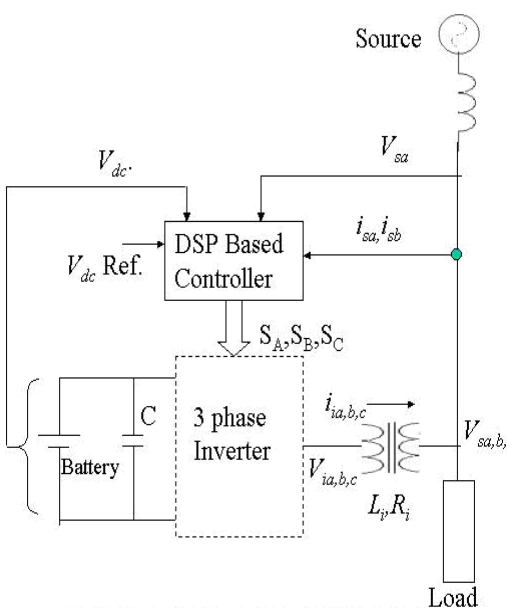


Fig. 4: Control scheme for BESS

The basic circuit topologies widely used are presented in Fig. 3a and Fig. 3b. In battery storage the dc bus voltage is regulated as in the conventional STATCOM design. The conditions of the batteries monitoring under charging and discharging operation mode needs additional control. Another storage device is SMES. It is interfaced to STATCOM dc bus through the dc two-quadrant chopper. In this circuit it is possible to regulate the SMES current under constant dc terminal voltage. The proposed new control strategy maintains the dc voltage constant under any front-end system variation. This scheme has several advantages over the battery storage system under the proposed control scheme.

**Control strategy:** Interfacing of batteries and super-conducting coil to STATCOM are dealt with two different control strategies. The main aims of the control scheme are:

- Regulate the real and reactive power demand of the load
- Compensate the harmonics due to non-linear loads
- To keep the dc bus voltage constant under any transient condition

**Battery energy storage system control:** The front-end inverter is set to regulate the current in the system to compensate for reactive power and harmonic compensation. The proposed control scheme is shown in the Fig. 4. The important control parameter is to regulate the source current in its magnitude while it should be in phase with the source voltage. This makes the source to look system as a resistive circuit, in other words it supplies only the real power required by the load. The current controlled mode of operation is presented as:

$$L_i \frac{di_{ia,b,c}}{dt} = -R_s i_{ia,b,c} + (V_{sa,b,c} - V_{ia,b,c}) \tag{20}$$

$$\frac{dv_{dc}}{dt} = (i_{ia} S_A + i_{ib} S_B + i_{ic} S_c) / C \tag{21}$$

where, $V_{sa,\,b,\,c}$ and $V_{ia,\,b,\,c}$ are the inverter and point of common coupling voltages. The switching signals are SA, SB, SC of the inverter and expressed in terms of the Vdc as under:

$$v_{ia} = \frac{v_{dc}}{3}(2S_A - S_B - S_C)$$

$$v_{ib} = \frac{v_{dc}}{3}(-S_A + 2S_B - S_C) \quad (22)$$

$$v_{ic} = \frac{v_{dc}}{3}(-S_A - S_B + 2S_C)$$

Switching signals are obtained by comparing reference currents with actual currents. Hysteresis controller is used for the comparison. The required compensated mains currents to be sinusoidal and in phase with mains voltage in spite of the load characteristics. Therefore the reference current for the comparison must be derived from the source voltage. These currents after compensation can be expressed as:

$$i_{sa} = I\sin(\omega t)$$

$$i_{sb} = I\sin(\omega t - 120^{\circ}) \quad (23)$$

$$i_{sc} = I\sin(\omega t - 240^{\circ})$$

The magnitude of the reference current must be I. The phase angle of the source currents should be as the source voltage to maintain the unity power factor. If the source current is kept constant during the increase in the real power demand of the load then it will reflect the change in the dc voltage across the capacitor. To control the dc bus voltage constant, the change in energy is set as a change in the magnitude of the source current. Therefore the reference current is regulated to compensate compensate the dc voltage through PI controller. The generated reference is independent of the source voltage magnitude being it is constant for a given system. This ensures that the scheme works under the nonideal source

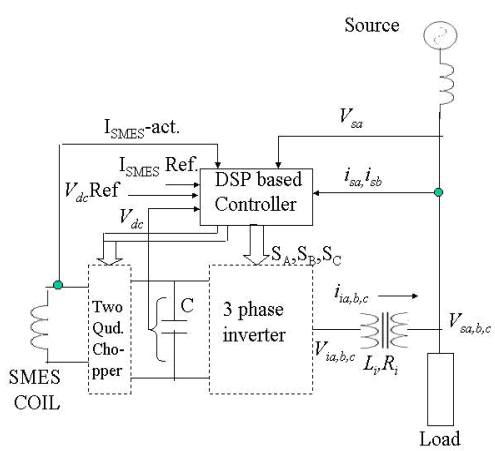


Fig. 5: Control scheme of SMES

Table 1: System parameters for simulation

| Parameters | Value |
|---|---|
| Source voltage-$V_s$ | 200 v |
| Source inductance-$L_s$ | 1e-06 H |
| Source resistance- $R_s$ | 0.1 Ohms |
| SMES coil inductance | 1 H |
| Dc bus voltage- $V_{dc}$ | 700 v |
| Inverter inductance | 0.9e-03H |
| Mains freq. | 60 Hz |
| SMES coil current | 100 A |

voltages also. Similarly, inverter compensates the demand of the load reactive power by keeping inverter voltage constant.

**Superconductor magnetic energy storage control:** The basic control scheme to regulate the demanded active and reactive power is the modified control scheme of the BESS. Figure 5 presents the detail scheme. Setting the new value of source current, keeping the SMES current constant regulates the active power variation on load side. The feedback of the SMES current is integrated instead of the dc voltage. While discharging or charging of the SMES, current flows through dc chopper. The hysteresis controller is used for the chopper for maintaining the dc bus voltage constant. The reference dc voltage is set as per the design of the circuit and hysteresis band is set to contain the ripple of the dc voltage in consideration of the capacitor value. This control variable is independent of the other parameters of the system. This makes the dc bus voltage almost constant under transient condition. This is added advantage as compared to BESS.

These control schemes must work satisfactorily under load leveling operation. The regulation of source current under BSEE control scheme is different than the SMES. The later scheme involves the large magnitude of the currents to be regulated. In BSEE being load are batteries, charging and discharging mode are different (constant current constant voltage) and are taken care in the control scheme. There is a limitation on the maximum source currents defined by the thermal limits and parameters of the system. Theses limits are also taken care into the control scheme proposed.

## SIMULATION RESULTS

The proposed scheme with BESS and SMES are simulated using SIMULINK to study the transient performance. The three phase inverter and chopper are modeled using the Power System Block Set of the SIMULINK. The control scheme with appropriate feedbacks and PI controller parameters are embedded in to the simulation. The basic system parameters used in simulation are given in the Table 1. The results for the BESS and SMES systems are presented in following sections.

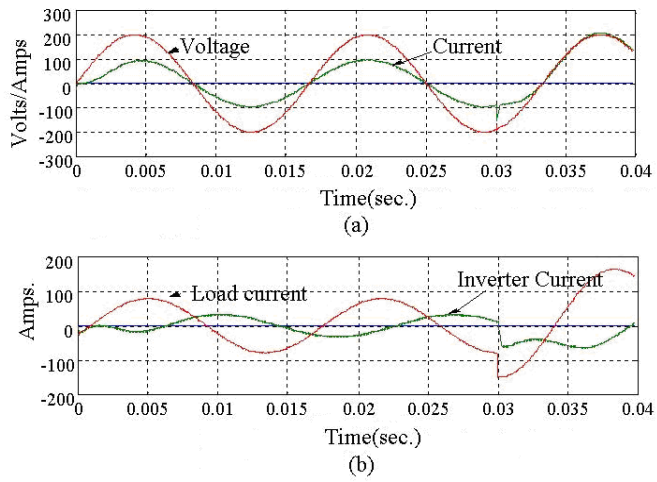


Fig. 6: Control scheme of SMES

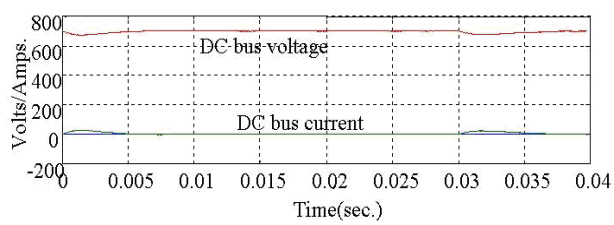


Fig. 7: DC bus voltage and current under step load change with BESS

Table 2: Parameters of the controller

| | $K_i$ | $T_d$ |
|---|---|---|
| BESS | 50 | 0.025 |
| SMES | 50 | 0.005 |

**Performance of the BESS:**

**Controller performance under step load change:** The three phase non- linear load is increased from 15 kW/ 5 kVAR to 15 kW/5 kVAR at time interval 0.03 sec. Figure 6a shows the source voltage and source current. The controller action can be observed as the source current gets changed to tune the variation. Figure 6b presents the inverter and load currents. The inverter current compensates the reactive power demand by adjusting the phase due to the load change.

The important observation can be made from Fig. 7, in which dc bus voltage and currents are getting corrected due to load change. The dc current becomes zero since the source is supplying all the real power demand and the inverter only supports the reactive power demand. The negative dc bus voltage swing depends on the controller parameters. The PI controller parameters are obtained for this system and given in the Table 2.

**Load leveling:** The load leveling in the BESS is a very important function. The source current is restricted to the maximum rated value even when extra load demand is applied. The source current and voltage is shown in the Fig. 8a. Inverter and load current is shown in the Fig. 8b. The battery charging and discharging operation is shown in the Fig. 8c. At the rated maximum source current the load leveling operation is performed. This operation is over-riding the normal active filtering and reactive compensation by keeping the source current constant.

**Performance of the SMES:**

**Controller idea ling the SMES current:** This simulation involves the control of chopper in addition to the inverter control. The system parameters used are given in Table 1. The source voltage and currents are shown in Fig. 9a. Figure 9b presents the load and inverter current during the load change. The proper current in the SMES coil at a given level is achieved by proper control of the front end inverter. The SMES coil current is kept constant under the load change. It is presented in the Fig. 10a. The DC bus voltage and currents are observed to be constant under this operation and presented in Fig. 10b.

**Controller performance under step load change:** A step change in load gives the variation in the inverter current as well as the source current to compensate the reactive and real power demand of the load. Under the

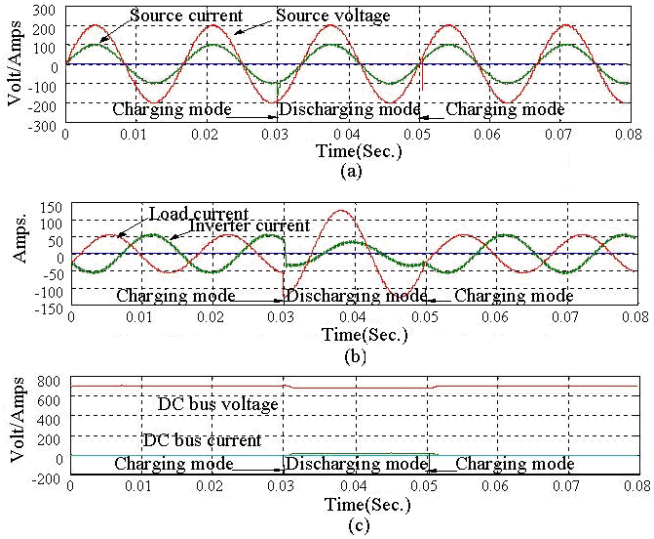


Fig. 8: (a) Source voltage and current during load leveling, (b) Inverter nad load current under load leveling, (c) DC bus voltage and current during load leveling

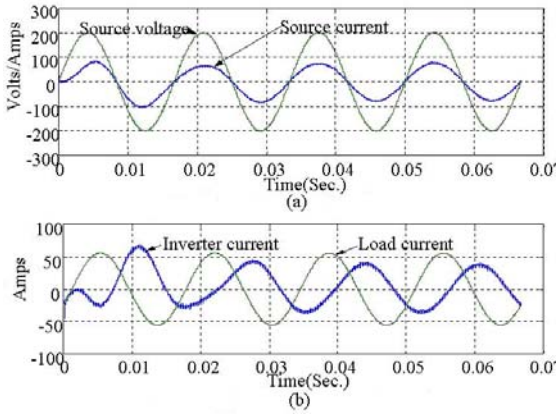


Fig. 9: (a) Source voltage and current, (b) Inverter and load current

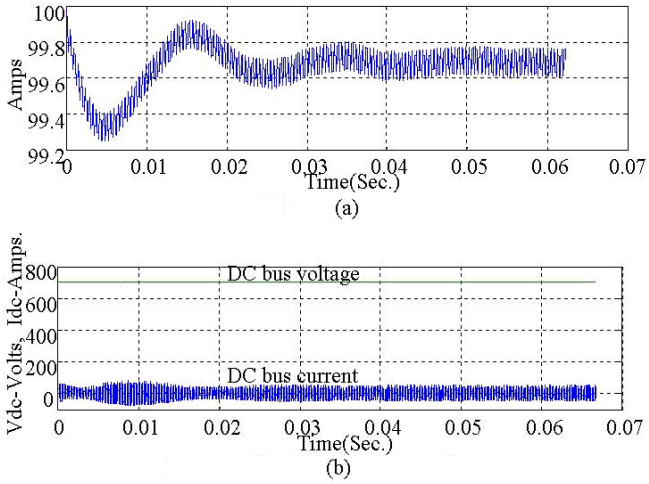


Fig. 10: (a) Current through SMES coil, (b) DC bus voltage and current

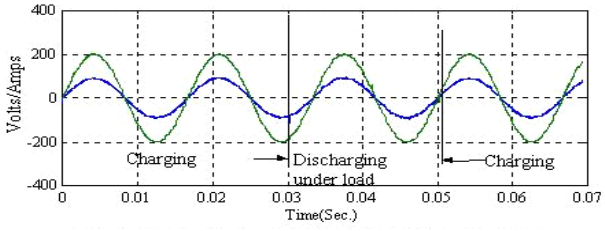


(a)

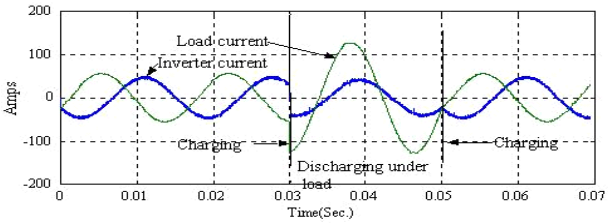


(b)

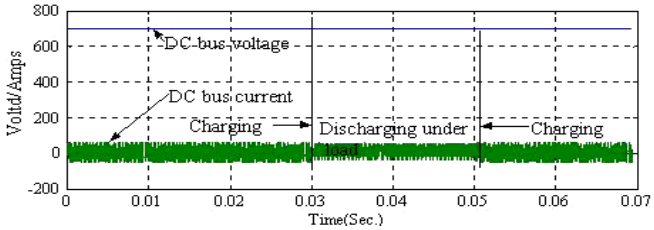


(c)

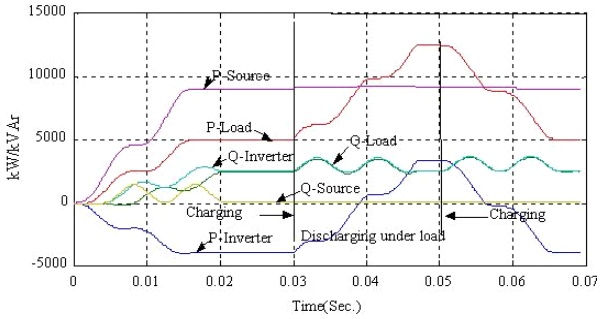


(d)

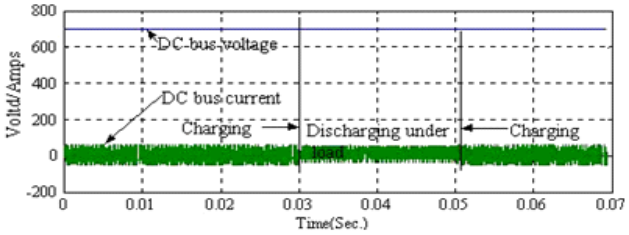


(e)

Fig. 11: (a) Discharging and charging under load, (b) Source voltage and current under load variation (c) load and inverter current, (d) DC bus voltage and current, (e) Real and reactive power flow under SMES support during step load change

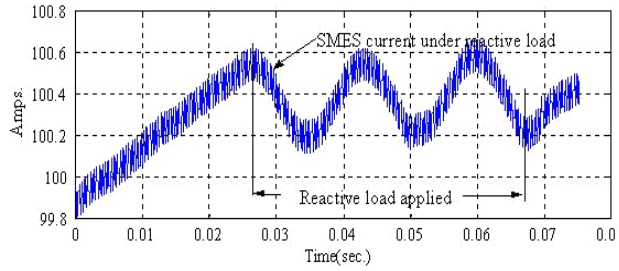


Fig. 12: SMES coil current under reactive loading

step change in the load, controller regulates the source current. The operation under load variation is shown in Fig. 11a where SMES coil current variation is observed. The coil starts regaining the current as the load is removed. The source current and voltage are shown in Fig. 11b and load current with inverter current is shown in Fig. 11c. The dc bus voltage and current are shown in Fig. 11d. The dc bus voltage is maintained constant during the operation. The real and reactive power balance during the operation is indicated in the Fig. 11e.

It can be observed that the source is only supporting real power and inverter only supporting reactive power of the load. The change in the direction of real power flow through the inverter indicates the charging and discharging of the coil. The coil does not support any reactive power demand. This is presented by applying the reactive load to the system. The coil current under this operation is indicated in Fig. 12. The parameters of the PI controller are given in the Table 2.

**Load leveling:** The source current is driven to the maximum limit to support the load real power. This utilizes the maximum capacity of the source. The stored energy is utilized when the limit of maximum source current is reached. The coil will discharge to support the real power of the load under this condition only. It can be observed from Fig. 11a.

The controller operation under step load change shows the response of the SMES is faster than that of the BESS. This operation is performed under the constant dc bus voltage as shown in Fig. 10b and 11d. The bus voltage is kept constant in SMES while dc bus voltage swings with the load change in the BESS. The controller performs the load leveling operation by utilizing the maximum rated capacity of the source. The other function of STATCOM remains in force with the additional features of load leveling and real power support.

## CONCLUSION

The feasibility of connecting the storage of energy to the STATCOM is considered with the improved performance. The control of dc bus voltage with capacitors or batteries requires tuning of the controller parameters to restrict the dc bus voltage excursions. The control is set to utilize the maximum utilizationof the source real power and then allows the storage system to support the real power demand of the load. The following observations can be made from this study:

- A simple hysteresis controller is implemented
- There is only one PI controller used in the scheme.
- The performance as a active filter is satisfactory.
- The load leveling can be achieved.
- The availability of the real power support to STATCOM can enhance the transient limits and low frequency oscillations performance.

The SMES scheme has more advantages when comapred with the battery operated systems:

- The dynamics response of SMES is much better than BESS.
- The dc bus voltage remains constant in SMES systems.

The proposed controller also works under unbalanced system supply voltage.

## REFERENCES

Arsoy, A., Y. Liu, S. Chen, Z. yang, M.L. Crow and P.F. Ribeiro, 2001. Dynamic performance of a static synchronous compensator with energy storage. IEEE Power Eng. Soc. Winter Meet. 2: 605-610.

Daugherty, M.A., W.E. Budkles, F.A. Knudtson, D.L. Mann and P.W. Stephenson, 1993. SSD operating experience. IEEE T. Appl. Superconduct., 3(1): 204-206.

Domijan, A., G.T. Heydt, A.P.S. Meliopoulos, S.S. Venkata and S. West, 1993. Direction of research on electric power quality. IEEE T. Power Deliver., 8(1): 429-436.

Hingorani, N.G. and L. Gyugyi, 2000. Understanding FACTS-Concepts and Technology of Flexible AC Transmission System, IEEE Press.

Ise, T., Y. Murakami and K. Tsuji, 1986. Simultaneous active and reactive power control of superconducting magnet energy storage using GTO converter. IEEE T. Power Deliver., 1(1): 143-150.

Singh, B.N., A. Chandra and K. Al-haddad, 2000. DSP based indirect current controlled STATCOM Part 1: Evaluation of current control techniques. IEEE Proc. Elect. Power Appl., 147(2): 107-112.

Watanbe, E.H., R.M. Stephan and M. Aredes, 1993. New concepts of instantaneous active and reactive powers in electrical systems with generic load. IEEE T. Power Deliver., 8(2): 697-703.