Research Journal of Applied Sciences, Engineering and Technology 4(8): 929-936, 2012
ISSN: 2040-7467

Submitted: October 16, 2011 Accepted: November 23, 2011 Published: April 15, 2012

Adaptive Neuro Fuzzy Inference System Based DTC Control for Matrix Converter

[1]Venugopal Chitra, [2]K.S. Ravichandran and [3]R. Varadarajan
[1]School of Electrical, Electronics and Computer Engineering,
University of KwaZulu-Natal, South Africa
[2]School of Computing, SASTRA University, India
[3]School of Electrical and Electronics Engineering, SASTRA University, India

Abstract: In this study an Adaptive Neuro Fuzzy Inference System is introduced to select the switching states of Matrix Converters. Matrix converters have received more attention in research and industrial application due its advantages like four quadrant operation, sinusoidal input and output waveforms, controllable displacement factor, less number of switches etc., Matrix Converters are efficient in speed control of Induction motors than the conventional converters. There are two different control techniques namely field oriented control and Direct Torque Control systems available for closed loop operation of induction motors. The Direct Torque Control technique provides control of torque and flux directly. The major drawback of Direct Torque Control technique is the presence of ripples in torque and flux curves. This due to the presence of two level and three level hysteresis controllers in torque and flux control stages respectively. Also the conventional space vector and look up table method of switching state selection reduces the accuracy of switch state selection in the appropriate time width. This reduces the speed control performance of the motor. Also in this paper the hysteresis controllers are replaced by fuzzy controllers. the complete ANFIS based DTC for Matrix Converter is simulated in MATLAB/SIMULINK and the results shows that the use of Adaptive neuro fuzzy inference in Matrix Converter system increases the speed control performance of Induction Motor.

Key words: Adaptive neuro fuzzy inference system, conventional DTC system, direct torque control, fuzzy logic control, induction motor, matrix converter

INTRODUCTION

Recently, in Industrial applications Direct AC to AC converters have gained considerable interest. Matrix Converter is one of direct AC to AC converter with less number of switches. It consists of nine bidirectional switches. It is able to perform direct AC to AC frequency and voltage conversion without the need for intermediate energy storage components. The converter offers several advantages of four quadrant operation, sinusoidal input and output waveforms and controllable displacement factor (Erdem *et al*., 2005).

Despite the several advantages Matrix Converter has not reached the industrial use yet due to its complexity in closed loop control. There are two types of closed loop control available namely Field Oriented Control (FOC) and Direct Torque Control (DTC). In FOC system the flux and torque can be controlled separately by the d-axis stator current and q-axis stator current respectively. The rotor flux vector which is rotating at the stator frequency is synchronized with the reference frame. The d-axis stator current is compared with the flux demand to produce the required rotor flux for all every reference speed command. The q-axis stator current is compared with the torque reference value. The ratio of flux and voltage frequency value produces the correct firing pulses for the matrix converter (Bimal, 1985). The advantages of FOC system are simple in structure and high efficiency. The major disadvantage of FOC system is its low dynamic performance due to the detuning of the controllers during switching (Buja, 1998).

In the DTC system, the flux and torque are controlled by hysteresis controllers. The voltage vector from a switching table is selected from the controller output variables and stator flux position. The selected voltage vector produces the corresponding gating signals for the Matrix Converter switches. The advantages of DTC system are its high dynamic performance and fast torque response (Miloudi *et al*., 2007). The disadvantage of DTC system is high torque ripples due to the sector changes during switching operation.

Since the timing of switch actuation signal is most important in both FOC and DTC systems, fixed switching patterns are used in most of the research works. In the fixed switching patterns the timing of switch actuation signal can be precalculated. It can be maintained constant

Corresponding Author: Venugopal Chitra, School of Electrical, Electronics and Computer Engineering, University of KwaZulu-Natal, South Africa

for certain output frequencies such as 25, 50 and 100 Hz at which the input and output frequencies are synchronized. When the input and output frequencies are asynchronized, the switching pattern will never repeat and cannot therefore be precalculated and (Nabil *et al*., 2010)

The intelligent controllers can eliminate the difficulties present in the PI can hysteresis controllers in DTC and FOC system. There are different types of intelligent controllers available namely, Fuzzy controllers, Artificial Neural Network (ANN) Controllers and Adaptive Neuro Fuzzy Inference System (ANFIS) based controllers. The dynamic response of Fuzzy controller is very high compared to the conventional controllers. The accuracy of the output is increased in the ANN controller due it is training and testing method. The ANFIS controller serves the advantages of Fuzzy controller and ANN controller (Jyh-Shing *et al*., 1996).

To improve the performance of the closed loop control systems and to eliminate the disadvantages of PI can hysteresis controllers, ANFIS controller is introduced in this paper in DTC closed loop control methods. The look up switching table method in DTC system is also replaced by dynamic switching pattern calculation method using ANFIS controllers. In this paper, DTC closed control system is employing ANFIS controller is described and the system is tested using Matlab/Simulink. The flux and torque estimators in the conventional DTC system are replaced by Fuzzy controllers and the ANFIS controller replaces the conventional fixed switching table pattern. It can be seen that the switching duty cycles at every sampling time is maintained constant by testing and training method of ANFIS controller. Hence the ripples in the torque curve are reduced and the dynamic performance of the Induction Motor fed by Matrix Converter drive is increased.

MATRIX CONVERTER

Matrix converter topology: Matrix Converter (MC) provides all silicon solution to direct ac-ac conversion which produces variable output with variable frequency. The MC is a forced commutated converter which uses nine bidirectional switches. The arrangement of switches and the structure of matrix converter is shown in Fig. 1(Binjun and Jianlin, 2010).

The absence of bulky energy storage dc link makes the structure simple and directly connects the load to the power supply. The absence of energy storage dc link complicates the freewheeling path of the circulating current. The MC requires proper commutation method to achieve sinusoidal output voltage and sinusoidal input current without generating current and voltage spikes. There many different modulation strategies are developed to achieve simultaneous commutation of switches namely direct modulation methods and indirect modulation methods. The Venturini approach is one of the effective method used in vector control of Induction Motor (IM). The MC consists of an array of 3 x 3 bidirectional switches which connects the input voltage source to output IM load. Since the MC is fed by voltage source and the load is of inductive nature, the switching function of single switch is define as, (Alesina and Venturini, 1989; Wheeler *et al*., 2002):

$$S_{I0} = \begin{cases} 1, & switch\ S_{I0}\ is\ closed \\ 0, & switch\ S_{I0}\ is\ opened \end{cases} \quad (1)$$

where, I = {A,B,C} and o ={a,b,c} and the requirement of switch action is:

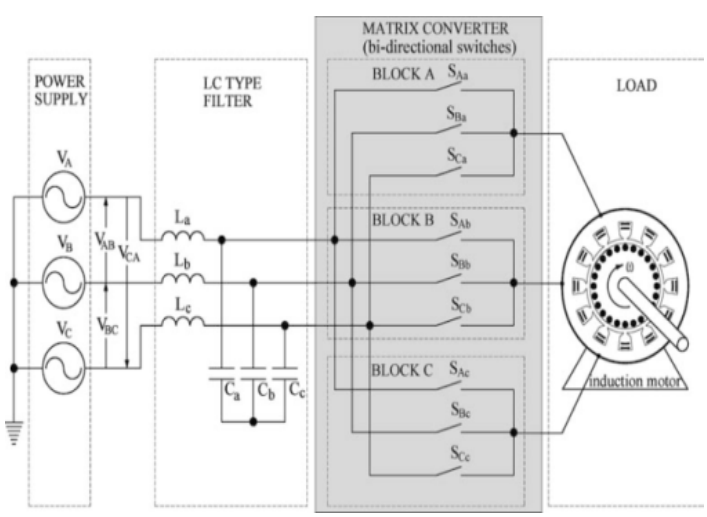

Fig. 1: Matrix converter arrangement

$$S_{Ao} + S_{Bo}\ S_{Co} = 1 \qquad (2)$$

The switching states can be derived from Eq. (2). The Matrix Converter has 27 switching vectors and the voltage vectors can be categorised as zero voltage vectors, fixed magnitude and phase angel, variable magnitude and phase angle.

The relationship between load voltage V_o and source voltage V_I is given as follows:

$$\begin{bmatrix} V_a \\ V_b \\ V_c \end{bmatrix} = \begin{bmatrix} S_{Aa} & S_{Ba} & S_{Ca} \\ A_{Ab} & S_{Ba} & S_{Cb} \\ S_{Ac} & S_{Bc} & S_{Cc} \end{bmatrix} \begin{bmatrix} V_A(t) \\ V_B(t) \\ V_C(t) \end{bmatrix}$$

where $V_o = \begin{bmatrix} V_a(t) \\ V_b(t) \\ V_c(t) \end{bmatrix}$ And $V_1 = \begin{bmatrix} V_A(t) \\ V_B(t) \\ V_C(t) \end{bmatrix}$

$$[V_o] = [S_{I0}][V_I] \text{ or } V_0 = TV_I$$

The duty cycle m_{10} of the switch S_{10} can vary between 0 and 1. The duty cycle can be defined as:

$$m_{I0} = \frac{t_{I0}}{T_s}$$

where t_{10} is the switching time of single switch in each input and output phase. Ts is the total sequence time.

The relationship between output phase voltage and input phase voltage can be defined as:

$$V_O = MV_1$$

where the transfer matrix can be defined as:

$$M = \begin{bmatrix} m_{Aa} & m_{Ba} & m_{Ca} \\ m_{Ab} & m_{Bb} & m_{Cb} \\ m_{Ac} & m_{Bc} & m_{Cc} \end{bmatrix}$$

where,

$$m_{Aa} = \frac{1}{3}(M_{Ac} - M_{Aa}) - \frac{1}{3}(M_{Bc} - M_{Ba})$$

$$m_{Ab} = \frac{1}{3}(M_{Aa} - M_{Ab}) - \frac{1}{3}(M_{Ba} - M_{Bb})$$

$$m_{Ac} = \frac{1}{3}(M_{Ab} - M_{Ac}) - \frac{1}{3}(M_{Bb} - M_{Bc})$$

where m_{I0} can be calculated as:

$$M_{Aa} = \frac{1}{3} + k_{31} + \frac{2}{3v_{I\,m}^2}(v_a + k_{33})\left(\frac{2}{3}v_{AB} + \frac{1}{3}v_{BC}\right)$$

$$M_{Ba} = \frac{1}{3} + k_{32} + \frac{2}{3v_{\mathrm{Im}}^2}(v_a - k_{33})\left(\frac{1}{3}v_{BC} - \frac{1}{3}v_{AB}\right)$$

$$M_{Ca} = 1 + (M_{Aa} + M_{Ba})$$

where,

$$k_{31} = \frac{2}{9}\frac{q}{q_m}\sin(\omega_I t)\sin(3\omega_I t)$$

$$k_{32} = \frac{2}{9}\frac{q}{qm}\sin\left(\omega_I t - \frac{2\pi}{3}\right)\sin(3\omega_I t)$$

$$k_{33} = -\sqrt{v_{om}^2}\left[\frac{1}{6}\cos(\omega_o t) - \frac{1}{4}\frac{1}{q_m}\cos(3\omega_I t)\right]$$

where q is the desired voltage ratio and is given by $q = \sqrt{\frac{v_{om}^2}{v_{\mathrm{Im}}^2}}$ and q_m is the maximum voltage ratio (0.866). V_{Im} is the peak input voltage and v_{om} is the peak output voltage.

Fuzzy torque and flux controllers: The conventional DTC controller is shown in Fig. 2. There are three important parameters namely electromagnetic torque, flux and the angular sector of flux plays major role in calculating the switching vector to select proper switching state of a switch. In the conventional system three level and two level hysteresis comparators are used to estimate the electromagnetic torque and flux values respectively. The angular flux sector is used along with the estimated electromagnetic torque and flux values to select the required voltage vector. From the selected voltage vector the appropriate switching configuration and hence the switches to be fired are selected (Mahendran and Gurusamy, 2009).

In the intelligent DTC controller, the fuzzy logic controllers are used to estimate the electromagnetic torque and flux values. (Fatiha and Rachid, 2005). In the

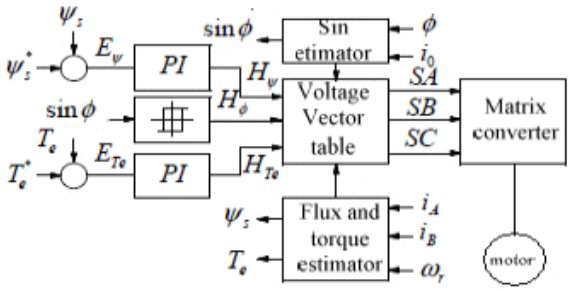

Fig. 2: Conventional DTC controller

generalized fuzzy system shown in Fig. 3, it can be seen that the system consists of fuzzification unit, knowledge base unit, decision making unit and defuzzification unit. The input variables are fuzzified in the fuzzification unit. Appropriate control rules are evaluated and stored in the knowledge base unit and then combined with the fuzzification unit output in the decision making unit. The generated output is defuzzified to generate the crisp value of output.

In this study two fuzzy controllers are used to replace three level torque comparator and two level flux comparator in the conventional system.

In the fuzzy torque comparator, the inputs are estimated torque value and reference torque values. In the fuzzy system seven linguistic values namely Negative High, Negative Medium, Negative Small, Positive Small, Positive Medium, Positive High are used to calculate the crisp value of Torque error. The fuzzy control rules for Torque error is shown in Table 1. The centre of gravity defuzzification technique is used to estimate the crisp output torque value.

The inputs for the flux comparators are reference flux values and estimated flux values from the torque and flux estimators. The fuzzy linguistic values used to calculate the flux error are High, Medium and Small. The output generated from the fuzzy flux comparator is the crisp flux value. The defuzzification technique used is centre of gravity method. The fuzzy control rule for calculating the flux error is shown in Table 2.

The third variable is the stator flux angle linkage which is calculated as:

Table 1 : Fuzzy Control Rules – Torque Error

	e						
ece	NH	NM	NS	ZE	PS	PM	PH
NH	NH	NH	NM	NM	NS	NS	ZE
NM	NH	NM	NM	NS	NS	ZE	PS
NS	NM	NM	NS	NS	ZE	PS	PS
ZE	NM	NS	NS	ZE	PS	PS	PM
PS	NS	NS	ZE	PS	PS	PM	PM
PM	NS	ZE	PS	PS	PM	PM	PH
PH	ZE	PS	PS	PM	PM	PH	PH

Table 2:Fuzzy Control Rules – Flux Error

	e		
e/ce	NG	ZE	PO
NG	ZE	ZE	SL
ZE	ZE	SL	ME
PO	SL	ME	HH

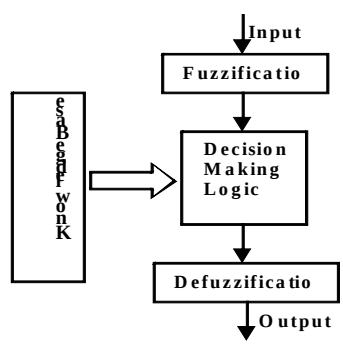

Fig. 3: Generalized fuzzy system

Table 3 : Selection of Switching States

Sector of voltage vector	1		2		3		4		5		6	
	θ = +1	θ = -1	θ = +1	θ = -1	θ = +1	θ = -1	θ = +1	θ = -1	θ = +1	θ = -1	θ = +1	θ = -1
V1	-3	+1	+2	-3	-1	+2	+3	-1	-2	+3	+1	-2
V2	+9	-7	-8	+9	+7	-8	-9	+7	+8	-9	-7	+8
V3	-6	+4	+5	-6	-4	+5	+6	-4	-5	+6	+4	-5
V4	+3	-1	-2	+3	+1	-2	-3	+1	+2	-3	-1	+2
V5	-9	+7	+8	-9	-7	+8	+9	-7	-8	+9	+7	-8
V6	+6	-4	-5	+6	+4	-5	-6	+4	+5	-6	-4	+5

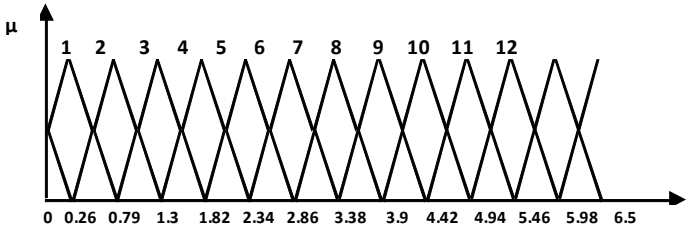

Fig. 4: Flux linkage angle

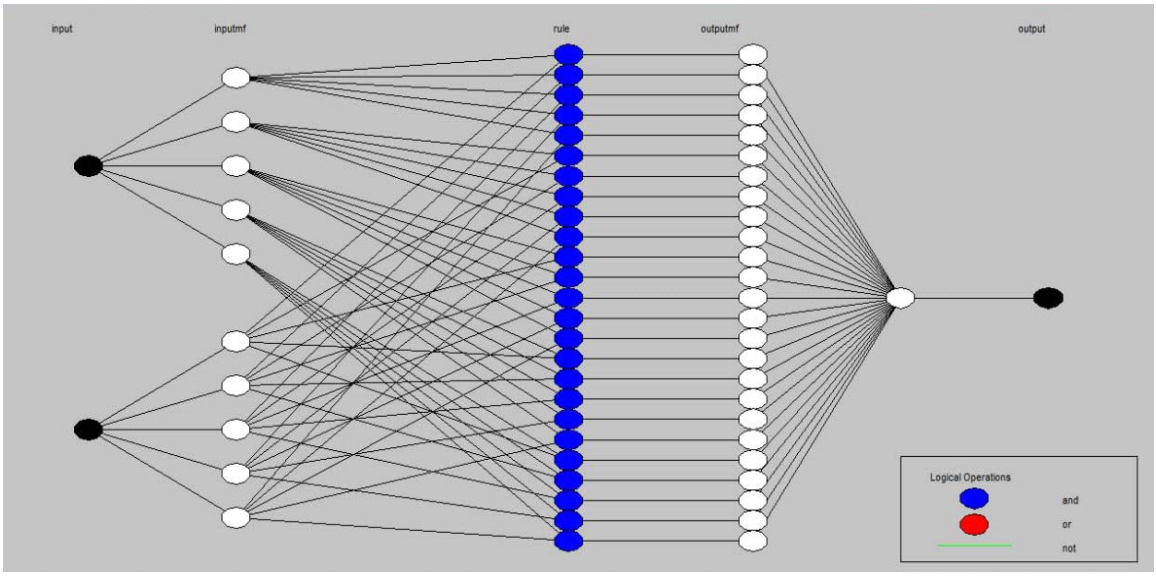

Fig. 5: ANFIS rules diagram

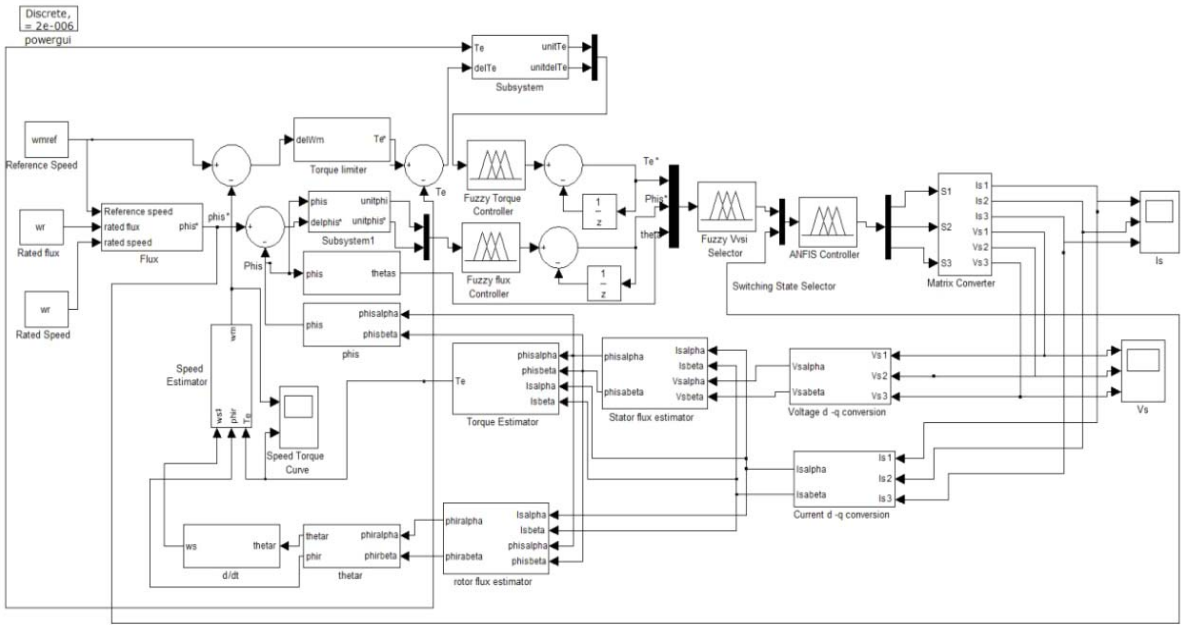

Fig. 6: Complete simulation model

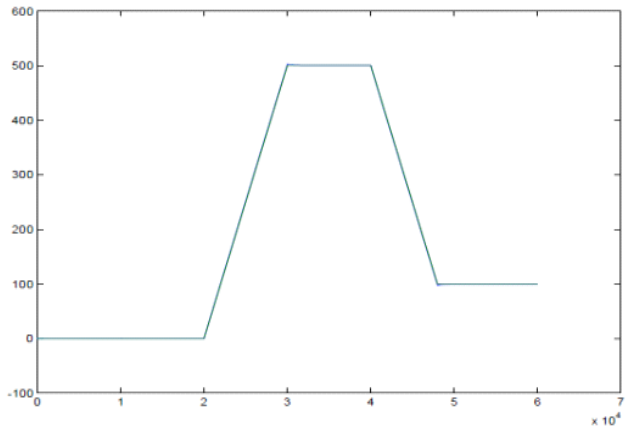

Fig. 7: Speed variation with zero reference torque

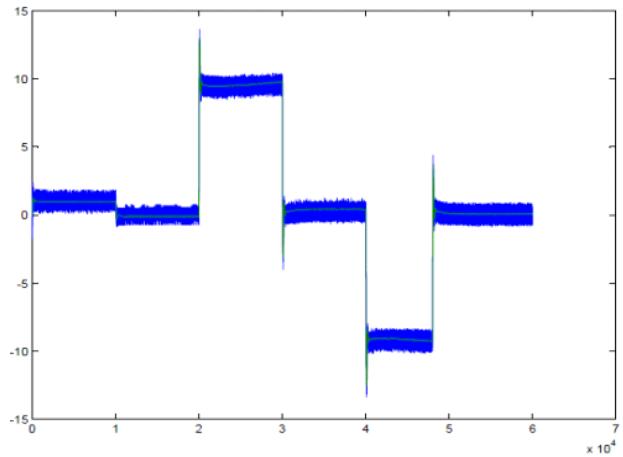

Fig. 8: Torque variation with zero reference torque

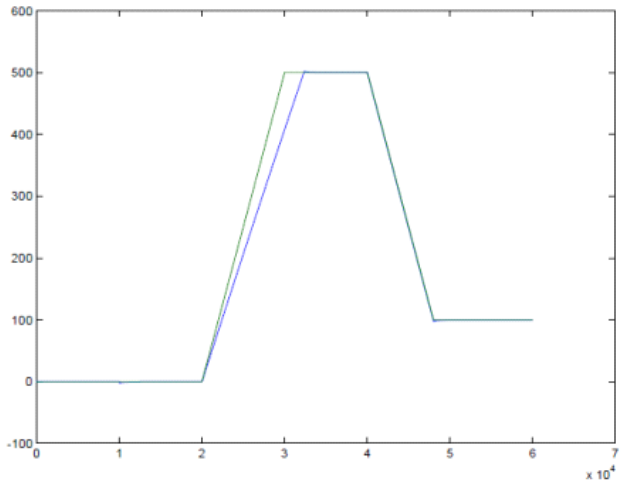

Fig. 9: Speed variation with reference torque of 10Nm

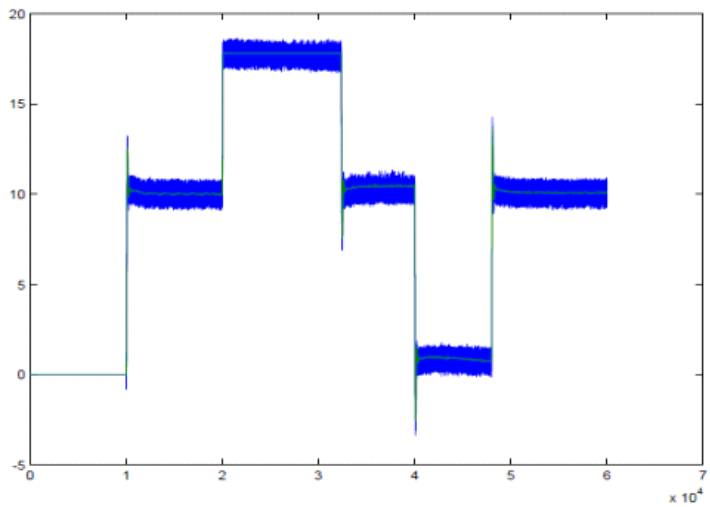

Fig. 10: Torque variation with reference torque of 10 Nm

Table 4: Selection of Switches to be fired

Switching Configurations	Matrix Convereter Switches be fired Phase A	Phase B	Phase C
-1	S_{Ba}	S_{Ab}	S_{Ac}
+1	S_{Ac}	S_{Bb}	S_{Bc}
-2	Sca	S_{Bb}	S_{Bc}
+2	S_{Ba}	S_{Cb}	S_{Cc}
-3	S_{Ba}	S_{Ab}	S_{Bc}
+3	S_{Aa}	S_{Bc}	S_{Ac}
-4	S_{Aa}	S_{Bc}	S_{Ac}
+4	S_{Aa}	S_{Ab}	S_{Bc}
-5	S_{Ba}	S_{Cb}	S_{Bc}
+5	S_{Ca}	S_{Bb}	S_{Cc}
-6	S_{Ca}	S_{Ab}	S_{Cc}
+6	S_{Aa}	S_{Cb}	S_{Ac}
-7	S_{Aa}	S_{Ab}	S_{Bc}
+7	S_{Ba}	S_{Bb}	S_{Bc}
-8	S_{Ba}	S_{Bb}	S_{Cc}
+8	S_{Ca}	S_{Cb}	S_{Bc}
-9	S_{Ca}	S_{Cb}	S_{Ac}
+9	S_{Ca}	S_{Cb}	S_{Ac}
0_a	S_{Aa}	S_{Ab}	S_{Ac}
0_b	S_{Ba}	S_{Bb}	S_{Bc}
0_c	S_{Ca}	S_{Cb}	S_{Cc}

$$\theta = \tan^{-1}\left(\frac{\varphi ds}{\varphi qs}\right)$$

The fuzzy controller uses twelve linguistic values to calculate the flux linkage angle as shown in Fig. 4.

ANFIS controller: The ANFIS controller combines the advantages of fuzzy logic technique and ANN technique. The Artificial Neural Network (ANN) can be trained by online or offline training process using the prior knowledge about the output of the system. The proposed ANFIS system consists of rule base, data base, decision making unit, fuzzification interface and defuzzification interface units. These functional blocks are generated using network layers. The inputs to the ANFIS controller are torque error, flux error and stator flux linkage angle. The error signals are multiplied by their respective weights and mapped through three fuzzy membership functions in the first layer. In the second layer, the minimum value of inputs signals is calculated and in the third layer the outputs values are normalized. The training process is actually tuning the weights to reduce the errors. The ANFIS structure changes according to the width of the membership function. The proposed ANFIS structure consists of seven membership functions and governed by 35 rules. The ANFIS layers and rules are shown in Fig. 5. The output of the ANFIS controller selects the appropriate switching configurations shown in Table 3 and hence the switches to be fired are selected as shown in Table 4.

RESULTS AND DISCUSSION

The proposed ANFIS controller based Direct Torque Control for Matrix Converter is shown in Fig. 6. It is simulated in Matlab/Simulink. The torque speed characteristic is shown in Fig. 7, 8, 9 and 10. It can be seen that the motor speed curve follows the reference speed. It can be seen from Fig. 7, that the reference speed of 500 rpm is applied at 2 msec with no load torque. With a transient time of 1msec the motor speed reaches the reference speed of 500 rpm. It can be seen from Fig. 8 that during the speed transient, the torque curve settles at 10 Nm and comes to 0 Nm when the motor speed reaches 500 rpm. At 4 msec, reference speed changes to 100 rpm the torque curve settles at -10 Nm during speed transient and then the settles at 0 Nm when the motor speed settles at the reference speed of 100 rpm at 5 msec. With the reference torque of 10 Nm, it can be seen from Fig. 9 that the transient time taken by the speed curve is 1.3 msec.

Also, from Fig. 10, it is seen that the torque reaches 18 Nm during speed transient and settles at the reference value of 10 Nm at 3.2 msec at which the speed settles at the reference value of 500 Nm.

The speed curve shows that the motor speed follows the reference speed at no load torque and there is a delay in transient time when the applied torque of is changed to 10 Nm It shows that the ANFIS network switching state selection is error free and accurate compared to the conventional controller.

CONCLUSION

The ANFIS Controller is designed and implemented successfully for Matrix Converter in Direct Torque Control System. The ANFIS controller eliminates the need for lookup table for selecting the switching states in the conventional Controller. The delay in the speed transient with reference torque can be avoided by improving the weigh factor calculation of ANFIS controller. Here the ANFIS controller is designed using Sugeno type fuzzy controller. Since the inputs of the ANFIS controller are fuzzified the outputs are error free. Also the overshoot and the fluctuation around the steady state conditions in the speed curve of conventional controller is eliminated

REFERENCES

Alesina, A. and M.G.B. Venturini, 1989. Analysis and design of optimum amplitude nine-switch direct ac-ac converters. IEEE Trans. Power Electron., 4(1): 101-112.

Bimal, K.B., 1985. Modern Power Electronics and AC Drives © 2002. Prentice Hall, New York, Tokyo.

Binjun, C. and Z. Jianlin, 2010. Direct Torque Control for induction machine based on Space Vector modulated Matrix Converters. 2nd Internatioal workshop in Database Technology and Applications.

Buja, G., 1998. A new control strategy of the induction motor drives: The direct flux and torque control. IEEE Ind. Electron Soc. Newslett., 45: 14-16.

Erdem, E., Y. Tater, and S. Suntar, "Modelling and Simulation of Matrix Converter using Space Vector Control algorithm", EUROCON 2005, Nov 2005.

Fatiha, Z. and N. Rachid, 2005. Direct torque control of induction motor with fuzzy minimization torque ripple. J. Electric. Eng., 56(7-8): 183-188.

Jyh-Shing, R.J., S. Chuen-Tsai and M. Eiji, 1996. Neuro-Fuzzy and Soft Computing: A Computational Approach to Learning and Machine Intelligence. Pearson Education.

Mahendran, N. and D.G. Gurusamy, 2009. THD Analysis of Matrix Converter fed load. pp: 828-832, PEDS.

Miloudi, A., E.A. Al Radadi and A. Draou, 2007. A variable gain pi controller used for speed control of a direct torque Neuro fuzzy controlled induction machine drive. Turkish J. Electric. Eng., 15(1): 37-49.

Nabil, T., R., Toufik and F. Bruno, 2010. An improved fixed switching frequency direct torque control of induction motor drives fed by direct matrix converter. Inter. J. Comp. Sci. Inf. Soc., 7(3).

Wheeler, P.W., J. Rodrigue, J.C. Clare, L. Empringham and A. Weinstain, 2002. Matrix Converter: A technology review. IEEE Trans. Ind. Electron., 49(2): 276-288.