Research Journal of Applied Sciences, Engineering and Technology 5(7): 2412-2419, 2013
ISSN: 2040-7459; e-ISSN: 2040-7467
© Maxwell Scientific Organization, 2013
Submitted: July 26, 2012 Accepted: September 12, 2012 Published: March 11, 2013

A Real-time Video Monitoring System of Mobile Terminals Based on Android Platform: A Case Study of Electric Power Systems

Songchun Gong, Songyin Fu and Zheng Chen
College of Information Science and Engineering, Ningbo University, Ningbo, 315211, China

Abstract: With the constant improvement of electrical equipment automation level, unattended electric power system node becomes increasingly popular. In addition, because of the ever-increasing industrial demand for electricity, electric power infrastructure becomes larger and larger, equipment and transmission link structure are more and more complex, all kinds of faults emerge one after another and administrative department has more and more urgent demand for electrical inspection personnel in terms of solving problems of various equipments and links. At present, relying on the development of network communication technology, real-time video monitoring system of electric power system is being promoted in a large scale. Real-time video acquisition system of electrical inspection personnel based on mobile terminal will also be applied gradually. A Real-time Video Monitoring System (RVMS) of mobile terminals based on Android platform is designed in this study. Through application test of practical environment, the system is able to meet the video data monitoring technique requirements of daily operation and maintenance of electric power system node. Mobile Video Acquisition Terminal (MVAT) is able to collect relevant real-time video data in the process of equipment and link faults inspection as well as to provide the video data to remote system maintenance expert, offering data decision to expert in remote real-time solution of equipment failure. All collected video data will be stored in remote system server for establishing a decision database of video information, so as to provide convincing data support for future performance analysis and fault detection of related equipment and link.

Keywords: Mobile terminal android, MVAT, real-time, RVMS

INTRODUCTION

Video monitoring experienced the evolution from analog to digital with the development of video coding technology and network transmission technology. Video monitoring generates many new application areas through combinations with other technologies and begins to play an increasingly important role in all walks of life. Video monitoring technology is now developing in the direction of wireless, intelligence, high definition and mobile (Luo and Wang, 2010). Electric power facilities and resources are important living and production resources, as well as important indicators of national economy and social life (MPEGLA Organization, 2011; Niu *et al*., 2005). In the last 20 years, along with the constantly rapid growth of China's GDP, power demand has maintained the momentum of high growth. Investment in electric power infrastructure increases day by day, electric network composition becomes more and more complex and electric power system management of administrative department is getting more and more difficult.

As for special application environment like electric power system, which has a large number of unattended transformer substations, moving vehicles, project sites and emergency disposal sites, wireless remote real-time monitoring provides an important technical support for industrial security management. The commercialization of 3G mobile communication technology has greatly promoted the development of electric power wireless monitoring technology and largely changed former situations of low wireless transmission bandwidth, inflexible control, poor quality of transmission image and impossibility of synchronous transmission of audio and video, providing space for the development of wireless video technology towards the direction of real-time, high definition, intelligent and mobile.

Unattended transformer substation becomes increasingly popular with the continuously rising automation level of transformer substation. Video monitoring system of transformer substation is being promoted in a large scale. The continuous development and improvement of communication network technology provides prerequisites for multi-level network monitoring. The current video monitoring system of transformer substation can achieve multi-level and multi-user video monitoring. In transformer substation, monitoring information also contains voice, data and other information in addition to image, including monitoring on equipment operation situation

Corresponding Author: Songchun Gong, College of Information Science and Engineering, Ningbo University, Ningbo, 315211, China

and environmental parameter as well as control of some on-site equipments. In order to conduct more intuitive monitoring on electric power equipment and transmission link environment, install wireless video acquisition terminal on electric power equipment and transmission link or collect real-time video data of working filed environment through mobile terminal in the process of equipment inspection of working staff, realizing online monitoring of equipment operating conditions through 3G wireless communication. Video monitoring can also realize intuitive surveillance of equipment working conditions and control real-time surroundings of incidents, so as to guarantee the normal operation of transmission link effectively. Considering frequent natural disasters in recent years, on-site emergency command becomes more and more important. Experts are able to conduct remote and real-time monitoring on video data of electric power equipment and transmission link through RVMS and to guide on-site equipment rescue work at all times and places.

At present, video monitoring system is widely used in routine maintenance of electric power system. From the current situation of practical application, however, application levels of electric power remote video monitoring systems applied in different fields are quite irregular and unified relevant technical standards have not yet been formed. Technologies used in all kinds of monitoring equipments are also quite different and targeted professional video monitoring products are in short supply. Besides, the lack of foresight in products design is likely to cause overlapping investment on equipment. Essential factors like simplified and convenient design, easy usage, stable performance and others are gradually becoming inevitable requirements of electric power system in constructing a new generation of remote monitoring network.

For example, some power enterprises at home and abroad began to design and deploy the RVMS based on private network and power line in the late 1990s. The type of RVMS has good overall performance but the power line deployment costs so much that this program is difficult to meet the need of video surveillance for long-distance transmission and thus is replaced by other programs. Beginning from 2002, power enterprises take wireless GPRS technology as the transmission carrier for RVMS in succession, which makes RVMS break through the shackles of traditional cable and greatly reduce the workload of system layout, making the plug-and-play of the device to be true. But the lower speed of wireless transmission then directly affects the effect of RVMS, even making "real-time" an empty talk.

The emergence of high-speed 3G wireless network greatly reduces technical limitations of RVMS. In addition, the rising of embedded terminal performance provides an unprecedented opportunity for the emergence of new high-performance RVMS which combines high-speed 3G wireless network, embedded technology and video coding and decoding. In recent years, there have been some new RVMS based on technologies mentioned above, however the performance tend to be relatively low and all fail to meet the need for actual use due to reasons like selection of coding programs, transmission modes and terminal types.

Due to the lack of a safe, convenient, cheap and effective RVMS program for the power system at home and abroad and the increasing need of related companies, it becomes a research focus about how to design a new RVMS with various advantages. In order to solve the problems above, this study directs at the actual operational need of power system work and has designed a RVMS based on Android platform through combining video capture, coding, transmission technology of mobile terminal equipments and 3G network communication technology. Its application in the actual environment of electric power system shows that the RVMS designed in this study has good video effect and transmission efficiency, better meeting the need of real-time video surveillance in the electric power system.

SYSTEM OVERALL DESIGN AND INTRODUCTION OF RELEVANT TECHNOLOGIES

In this study, Smart Phone is used as Mobile Video Acquisition Terminal (MVAT). System implementation process is as follows:

Step 1: MVAT acquires video data through camera shooting
Step 2: Software coding module of MVAT is processed through H.264 video compression coding
Step 3: MVAT creates dedicated communication channel through 3G mobile network (CDMA2000 EV-DO)
Step 4: MVAT transmits encoded data stream to Video Application Server (VAS) through dedicated channel
Step 5: VAS processes acquired data with H.264 video decoding
Step 6: VAS provides support for video display environment
Step 7: Authentication and video display and management

The main process of video data processing is as shown in Fig. 1. There are some important technical links in

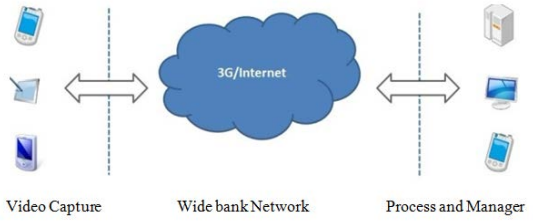

Fig. 1: Video data processing flow

APPPLICATION Home Contacts Phone Browser ···	
APPLICATION FRAMEWORK Activity Manager Window Manager Content Providers View System ···	
LIBRARIES Surface Manager Media Framework SQLite SGL ···	**RUNTIME** Core Libraries Dalvik Virtual Machine
LINUX KERNEL Display Driver Camera Driver Binder Driver USB Driver ···	

Fig. 2: Android system architecture

the overall design, so relevant technologies will be introduced and analyzed.

Android platform: Android is an operating system for mobile devices such as smart phones and tablet computers. It is developed by the Open Handset Alliance led by Google (Google Corporation, 2011). Android platform is an open source operating system based on Linux kernel, which is composed of operating system, middleware, user interface and application software. With the main application development language Java, it is a real open and complete mobile software for mobile terminal. Besides android is a wide-open platform for third-party software. Developers have more freedom in program development. Android operating system is provided to developers for free (Bray, 2010).

Android consists of a kernel based on the Linux kernel, with middleware, libraries and APIs written in C and application software running on an application framework which includes Java-compatible libraries based on Apache Harmony (Olga, 2008). Android system architecture consists of five parts, namely: Linux Kernel, Android Runtime, Libraries, Application Framework and Applications. The system architecture is shown in Fig. 2.

H.264 coding technology: H.264 is a high-performance video coding and decoding technology. It is a video compression standard discussed and set jointly by two international organizations ITU and ISO, which faces future and wireless environment.

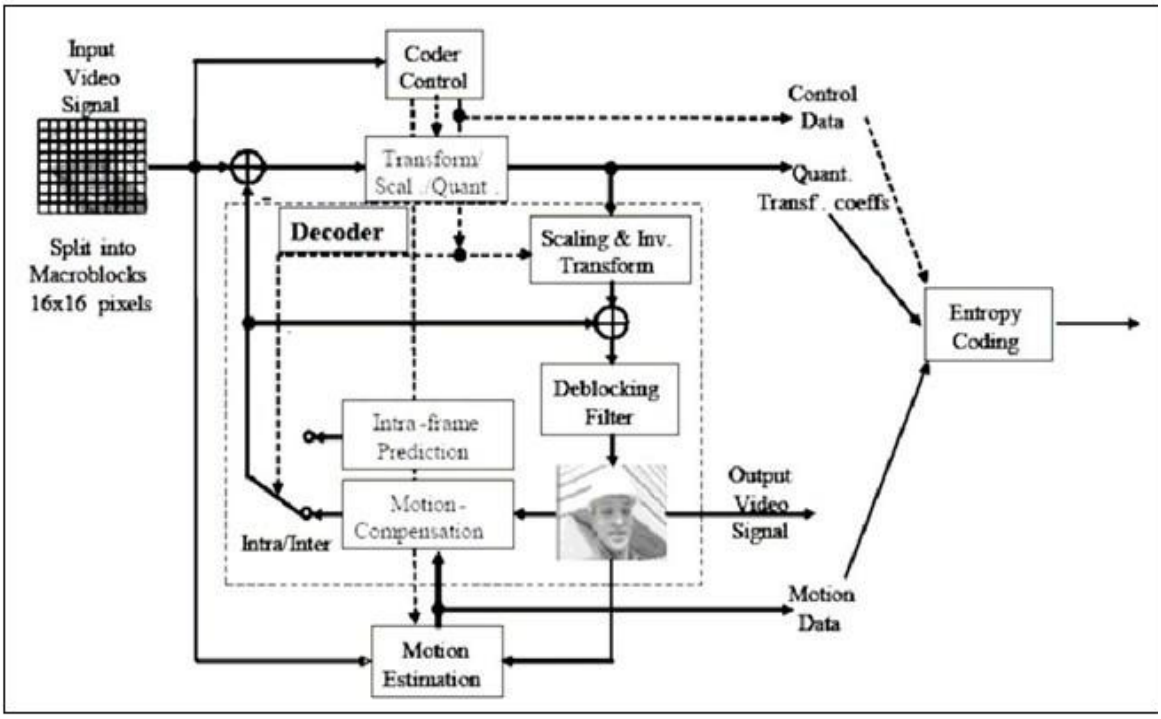

Fig. 3: H.264 encoder framework

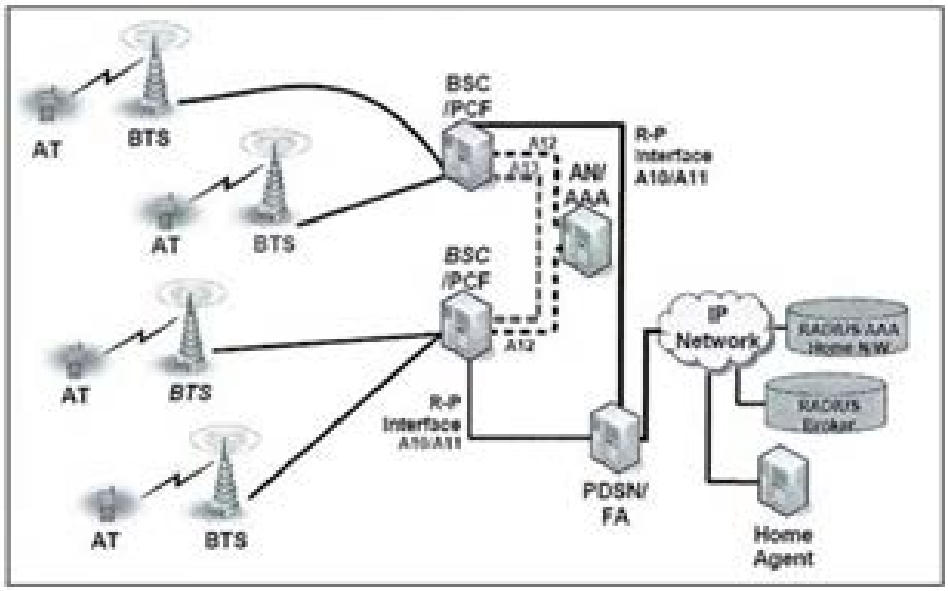

Fig. 4: Network architecture of EV-DO

Compared with previous video coding standard, H.264 has many technical features, such as intra prediction, unified VLC, motion estimation with high definition, multiple modes and multiple reference frames, integer transform based on 4×4 block, layered coding syntax, etc. These measures equip H.264 algorithm with fairly high coding efficiency. As for the same reconstructed image quality, H.264 saves about 50% code rate compared to H.263 (Li, 2011). Code stream configuration of H.264 has stronger network adaptability and more capability of error recovery, being well adapted to applications of IP and wireless network (Yu, 2006).

H.264 uses a series of new technologies so as to greatly improve comprehensive performance of code rate and image quality. However, the price is extremely complex algorithm of encoder. Just like the previous video coding standard, H.264 is also a traditional hybrid coding mode. The encoder framework is shown in Fig. 3 (Thomas *et al*., 2003). It is one of the problems needed to be studied in this study that how to find a relatively quick algorithm and shorten encoding time as much as possible on the premise of ensuring image quality and insignificant code rate increase.

G broadband communication technology based on EV-DO: Evolution-Data Optimized (EV-DO) is a telecommunications standard for the wireless transmission of data through radio signals, typically for broadband Internet access (CDMA Development Group, 2010). It uses multiplexing techniques including Code Division Multiple Access (CDMA) as well as Time Division Multiplexing (TDM) to maximize both individual users' throughput and the overall system throughput (Wikipedia, 2011). The network architecture of EV-DO is shown in Fig. 4 (Sun and Xing, 1997).

DETAILED DESIGN AND IMPLEMENTATION OF SYSTEM

Hardware topology framework design: The hardware topology framework of RVMS is shown in Fig. 5. The system is composed of three parts, namely Mobile Video Acquisition Terminal (MVAT), Video Processing and Management System (VPMS) and Video Monitoring Client (VMC).

Mobile acquisition terminal uses such hardware equipments as embedded mobile digital camera and mobile acquisition terminal. In this study, the XT882 smart phone of Motorola is adopted as the Mobile Video Acquisition Terminal (MVAT). This terminal has a NVidia Tegra 2 dual-core CPU of Cortex-A9 (Baidu Encyclopedia, 2012) structure with the main frequency of 1024 MHz, the RAM content of 512 MBytes and the ROM content of 8 GBytes, providing a solution of high scalability and high power efficiency. The Operating System (OS) of Android 2.3 version is used in Mobile Video Acquisition Terminal (MVAT). They can be connected with mobile operation network through CDMA2000 mobile 3G network (Qi and Vitebsky, 2002), as well as with local area network through WI-FI

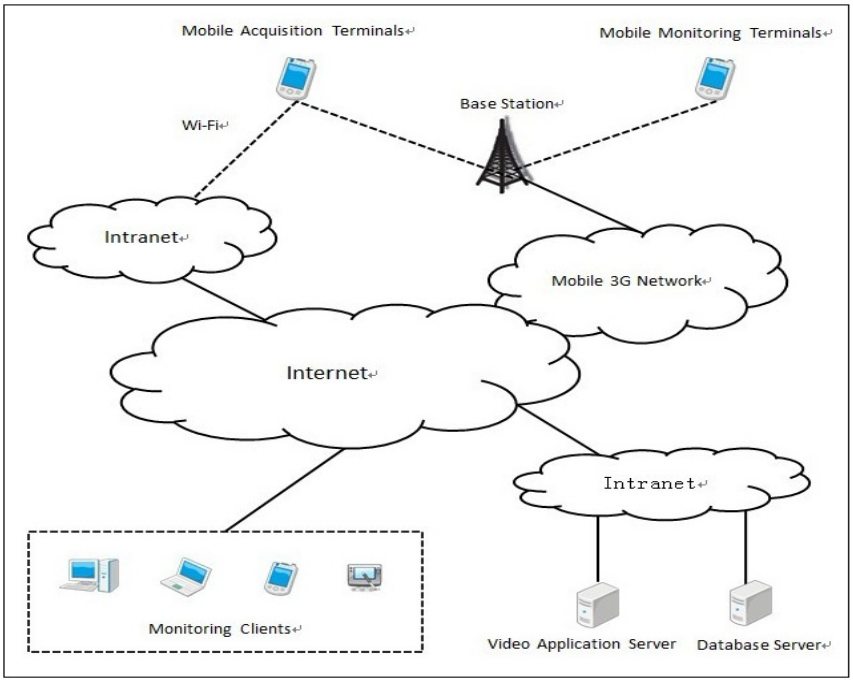

Fig. 5: Hardware topology framework of RVMS

network. Both of the two access methods will finally connect MVAT and the Internet, forming a necessary broadband network link of video data transmission.

VPMS consists of Video Application Server (VAS) and Database Server (DBS). Firstly, VAS is in charge of receiving and processing video data stream from each MVAT. After procedures like decoding, display support and others, complete video information will be finally displayed on various types of monitoring terminals or be delivered to back-end DBS for video storage that can be used for retrieval, viewing and management. VAS also has video data management of authentication module. It has preferable security and guarantees transmission speed and efficiency that DBS is interconnected with VAS through data middleware.

B-S/C-S hybrid software architecture is adopted in this system, so VMC, as a process of the server end, is able to conduct operations like video management through Video Client. It can also realize video management on different WEB browsers of different Operating Systems through installing supporting plug-in. VMC is composed of workstation, PC and mobile handheld terminal (like mobile phone), etc. These terminals are connected with VPMS through local area network, the Internet or 3G mobile network.

Software design of MVAT: The video acquisition section of H.264 compression technology based on

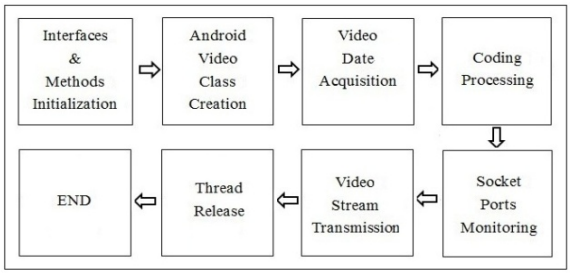

Fig. 6: MVAT video processing flow

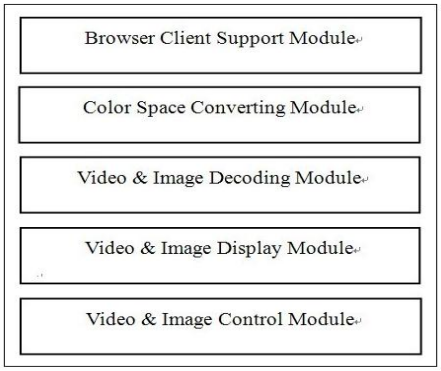

Fig. 7: Software module of server end

Android system contains two parts android video streaming extraction and Android interface design.

Fig. 8: Software user interface

Android is able to intercept data of video streaming in video preview. Corresponding interface function will be invoked every time one frame is acquired. Here, a Surface View class is defined in the upper interface of Android, which is mainly used to display collected images. Android collects video data of YUV format through built-in camera, transmits to application layer through interface of Surface, View class and displays through image description.

After finishing the above steps, MVAT software encapsulates and compiles in Android operating system to generate the JNI Dynamic Linking Library (DLL) of Android bottom library, so as to realize H.264 standard coding and decoding. Finally, processed video data are transmitted through Socket communication. MVAT video processing flow is shown in Fig. 6.

Software design of server end: As illustrated in Fig. 7, modular design is used in server end software that mainly consists of video image control module, display module, decoding module, color space conversion, WEB browser support module, etc. Software user interface is shown in Fig. 8. The upper left window is Channel 1001, showing the remote real-time monitoring video. The lower left window is Channel 1003, showing the video playback stored in system.

PERFORMANCE ANALYSIS

Performance test of H.264 coding and decoding: A light H.264 video coding and decoding scheme is used in this study, which searches for a reasonable balance between video compression ratio and compression time according to features of MVAT structure and

Table 1: Performance test of coding and decoding

Compression (ratio times)	Coding time of one frame (ms)	Decoding time of one frame (ms)	Theoretical frame rate of video (frame/s)
80	21	10.4	50
100	34	14.3	30
120	49	19.9	20

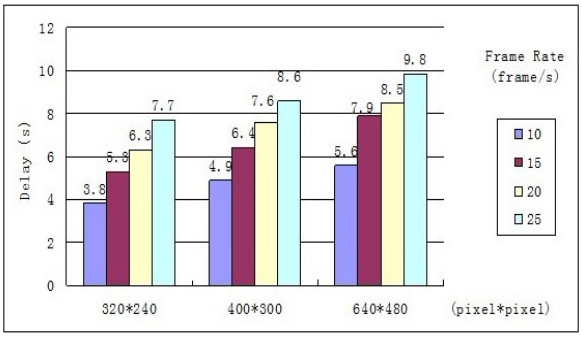

Fig. 9: Comparison of delays in different frame rates and image resolutions

performance. After repeated tests of the algorithm, it is able to meet the human vision requirement for smooth video of 15-20 frames when compression ratio is in the range of 80-120 times with 20-50 ms compression coding time of one frame and 10-20 ms decoding time. The test data are collected in single MVAT environment (Table 1).

According to technology research, the current Coding Time of One Frame (CTOF) of RVMS in electric power system used at home and abroad is basically from 30s to 50s and the Decoding Time of One Frame (DTOF) is from 10s to 25s, under the situation that the compression rate is 100 times. But as for real-time transmission, the upper limit of CTOF and DTOF users can tolerate is respectively about 50 and 30 ms. The CTOF and DTOF of the RVMS designed in this study is tested to be 34 and 14.3 ms under the same parameters. Its performance is in the upstream level compared with the same system at home and abroad.

Comparison of delays in different frame rates and image resolutions: Figure 9 shows data from comparison of delays in different frame rates and image resolutions. In three common resolutions, namely 320*240, 400*300 and 640*480 play the video at the frame rate of 10, 15, 20 and 25 frame/s, respectively and data delays can be basically controlled within 10s. Generally speaking, frame rates of 15-20 frame/s can basically meet the requirements of remote video monitoring. Delays within in 10s are also acceptable in actual use.

CONCLUSION AND PROSPECT

The real-time video monitoring system of mobile terminals based on Android platform designed in this study, can mainly meet the requirements of application areas like electric power, telecommunication and fire protection in terms of real-time video monitoring system of mobile terminals. With the rapid development of network communication technology, image compression technology and transmission technology, especially the arrival of 3G era, the 3G mobile video monitoring system will be widely used in such fields as emergency command, electric transmission line monitoring, electric power construction site, etc. Traditional video monitoring network is connected through optical fiber. Adding new camera requires cable re-laying with huge construction amount and high investment cost. 3G video monitoring system based on 3G wireless networks has a long transmission distance and strong capacity of anti-interference that video transmission is available where there is a mobile phone signal and flexible installation avoids the trouble of laying cable. Thus, it will inevitably provide the safe operation of power grid with new image monitoring technology support.

ACKNOWLEDGMENT

This study was supported by the Scientific Research Fund of Ningbo University (xyl11011, xkl11072), the Experimental Technology Research and Development Project of Ningbo University (syjs-201105) and the Technical Innovation Team Projects of the Science Technology Department of Zhejiang Province (2010R50009-8, 2010R50009-9).

REFERENCES

Baidu Encyclopedia, 2012. Cortex-A9. Retrieved from: http://baike.baidu.com/view/2937500.htm.

Bray, T., 2010. What Android Is. Retrieved from: http://www.tbray.org/ongoing/When/201x/2010/11/14/What-Android-Is.

CDMA Development Group, 2010. 3G-CDMA2000 1xEV-DO Technologies. Retrieved from: http://www.cdg.org/technology/3g_1xEV-DO.asp.

Google Corporation, 2011. Google Projects for Android. Retrieved from: http://www. Web citation.org/5wiw1JXa2.

Li, W., 2011. QoS Research of H.264 Video Transmission in Embedded Wireless LAN. Comput. Sci., pp: 83-85.

Luo, B. and W. Wang, 2010. Application of 3G Technology in Electronic Video Monitoring. Electric Power Information Technology (China), pp: 85-87.

MPEGLA Organization, 2011. Summary of AVC/H.264 License Terms. Retrieved from: http://www.mpegla.com/main/programs/AVC/Documents/AVC_TermsSummary.pdf.

Niu, S., F. Jin and Y. Liu, 2005. Research on Relation of Electric Power Infrastructure and Economic Development. North China Electric Power.

Olga, K., 2008. Google's Android Gains More Powerful Followers Business Week. Retrieved from: http://www.businessweek.com/the_thread/techbeat/archives/2008/12/googles_android_2.html.

Qi, B. and S. Vitebsky, 2002. Performance analysis of 3G-1X EV-DO high data rate system. IEEE Wireless Communications and Networking Conference, Orlando, FL, 1: 379-395.

Sun, L. and N. Xing, 1997. CDMA Mobile Communication Technology. People's Posts and Telecommunications Press, China.

Thomas, W., G.J. Sullivan., G. Bjontegaard and A. Luthra, 2003. Overview of the H.264/AVC video coding standard. IEEE T. Circ. Syst. Vid., 13(7): 560-576.

Wikipedia, 2011. Evolution-Data Optimized. Retrieved from: http://en.wikipedia.org/wiki/EVDO.

Yu, Z., 2006. Standards of Image Coding-H. 264 Technology. People's Posts and Telecommunications Press, China.