Research Journal of Applied Sciences, Engineering and Technology 5(11): 3117-3123, 2013
ISSN: 2040-7459; e-ISSN: 2040-7467

Submitted: September 25, 2012 Accepted: November 13, 2012 Published: April 05, 2013

Modeling and Simulation on Error Sources of the Designating System for Fully Automatic Carrier Landing

Han Zhimin and Hong Guanxin
School of Aeronautic Science and Engineering, BeiHang University, Beijing, China

Abstract: The photoelectric/radar designating system is an important part of the fully automatic carrier landing system for carrier aircrafts. The accuracy of the photoelectric/radar designating system has a certain impact on the landing accuracy of the carrier aircrafts under the guidance of the fully automatic landing system. This study analyzes the types and sources of the error which affects the accuracy of the photoelectric/radar designating system. By numerical simulation and computation, the impact on the final landing error caused by the photoelectric/radar designating system is analyzed.

Keywords: Fully automatic guiding system, landing error, photoelectric/radar designating system

INTRODUCTION

Both the semi-automatic carrier landing and the artificial landing are highly limited by the weather conditions and sea conditions and the landing accuracy of these two ways is closely related to the quality of the pilot. In order to guarantee the security of landing even in harsh weather conditions, ACLS (Automatic Carrier Landing System) for aircraft carrier is developed to decrease the influence caused by personal factors of pilots (Thomas *et al*., 2002; Qidan *et al*., 2012). ACLS is a comprehensive embodiment of the automatic landing technology for carrier-based aircrafts. It needs to control the landing glide path precisely. Also, it needs to guarantee a secure landing for the carrier-based aircraft on the motion deck of aircraft carriers in various weather and sea conditions. So, we investigate the factors which affect the accuracy of the ACLS landing guidance, as well as model and simulate the principles and processes of the landing errors caused by the error sources. We then summarize the level of influences on the final landing with different error sources. All we have done is very necessary for a better study on the fully automatic landing

The designating system of ACLS consists of two parts: shipboard equipment and airborne equipment. Shipboard equipment includes precision tracking radars, digital computers, stabilizing devices, console, coding/launchers for data transmission and so on. Airborne equipment includes receiver/decoder devices for the data transmission, approach/landing couplers, flight control systems and automatic throttle systems (Boskovic *et al*., 1998; Bajpai, 1999; Zhu, 2009; Huixin *et al*., 2011).

The shipboard tracks the radar and captures the aircraft and the system delivers the information of spatial location of aircrafts measured by the radar and the information of deck motion measured by the deck motion sensor to the compensation computer. This information is compared with the ideal landing trajectory that is pre-set after processing and the errors information of the spatial location is obtained. According to the error signals and the boot control law, the control instructions are computed and sent to the aircraft through the way of radio data link. According to the error signal obtained by the receiving device, the flight control system and the automatic throttle system in the carrier-based aircraft operate an aircraft and correct the flight path to make it land with ideal trajectory. The basic principle of the ACLS that is widely used in modern aircraft carriers/carrier-based aircrafts is as Fig. 1.

The objective of this study is to research on the factors affecting the accuracy of the fully automatic landing, which include data processing and transmission procedures, errors of designating devices and so on. Then we can model the forming principles of different factors and simulate the process of fully automatic landing guidance. By numerical simulation and computation, the impact on the final landing error caused by the photoelectric/radar designating system is analyzed.

OPERATING PRINCIPLES OF THE ACLS FOR CARRIER-BASED AIRCRAFT

The overall structure of ACLS has been decided in 1960s.The differences are only the concrete realization of the techniques and the devices, such as ship radar tracking systems, inertial navigation systems, improvements of airborne sensors and so on (Arthur *et al*., 2001).

Corresponding Author: Han Zhimin, School of Aeronautic Science and Engineering, BeiHang University, Beijing, China

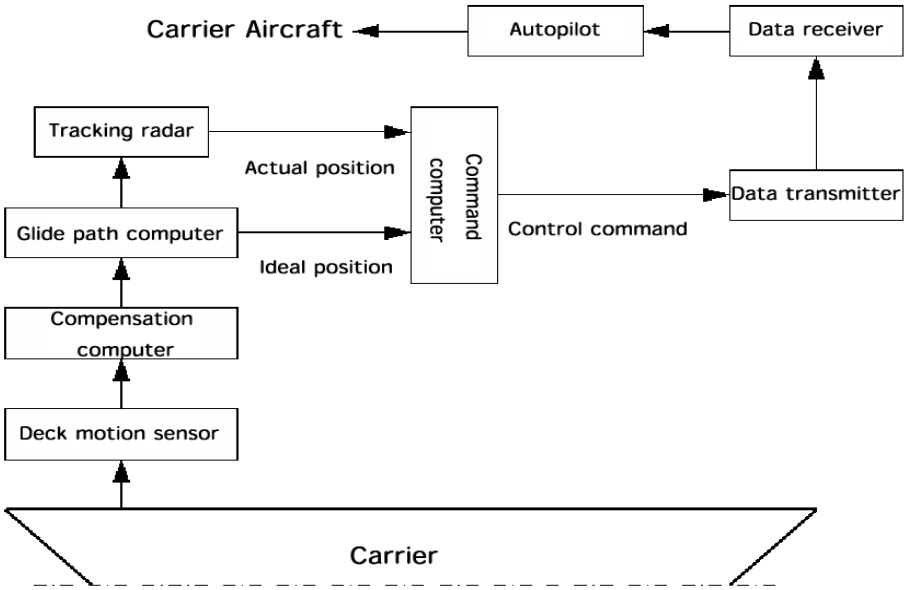

Fig. 1: Basic operating principle of ACLS

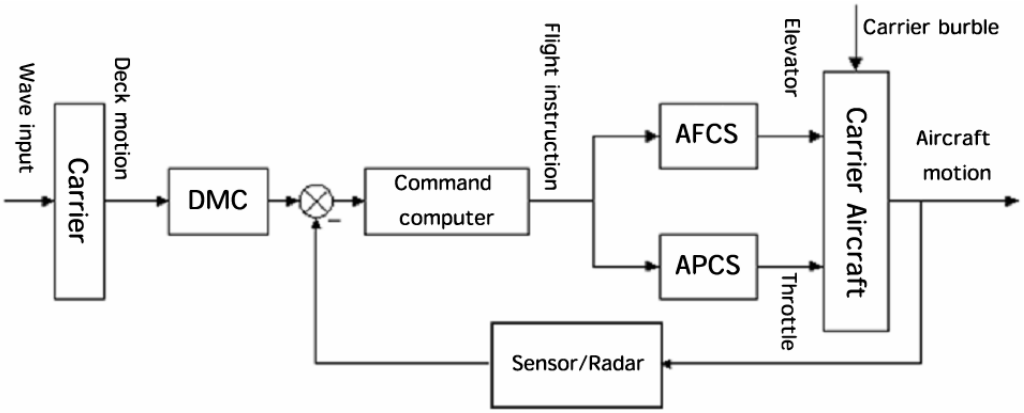

Fig. 2: The structural configuration of the longitudinal ACLS system

The ACLS includes Automatic Flight Control System (AFCS), Approach Power Compensator System (APCS) (Craig *et al*., 1971), Deck Motion Compensator (DMC) (Narendra and Balakrishnan, 1997). The structural configuration of the longitudinal ACLS system is as Fig. 2.

The deck motion of aircraft carriers caused by waves will change the ideal landing location. The Deck Motion Compensation (DMC) filters the changes of the ideal landing location. The obtained instructions of deck motion compensation and the spatial information of carrier-based aircrafts are put into the computer of ship borne instruction together (Jex *et al*., 1991). The computer combines above two information and gives the landing track/posture instructions according to the longitudinal control equation. The combined information is delivered to the carrier-based aircrafts by the wireless data link. The Automatic Flight Control System (AFCS) and the Approach Power Compensation System (APCS) in the aircrafts operate the elevator and the throttle respectively and make the flight obey the path's instructions. Also, through the radar tracking system on the aircraft, the information of position and velocity is measured (Durand and Wasicko, 1967). The autopilot is as Fig. 3.

ANALYSIS OF ERROR SOURCES THAT AFFECTING THE ACCURACY OF ACLS

Influence caused by time delays in the data processing and transmission procedure:

Generation of time delays: The bootstrapping of ACLS is processed by the computer in the aircraft carrier and then is sent to the carrier-based aircrafts by the wireless data link. In the procedure of data processing and transmission, there are certain time delays, which will reduce the stability margin of ACLS.

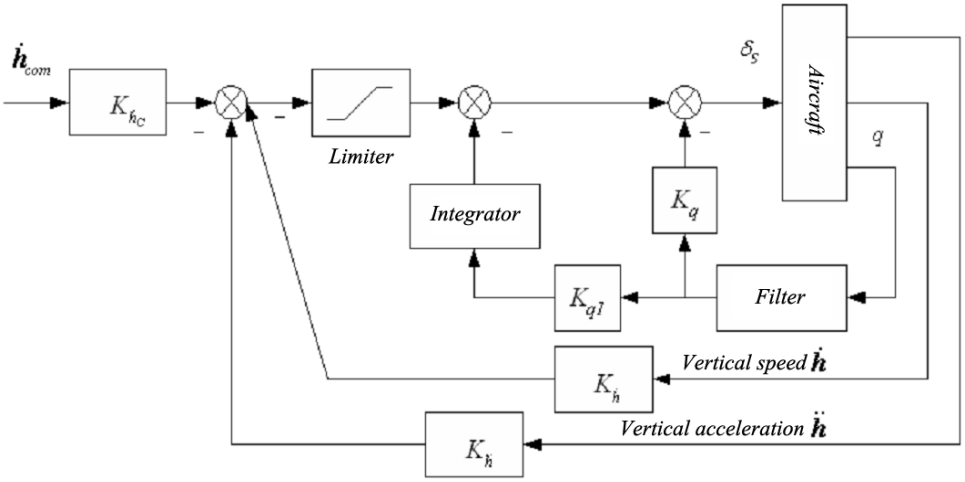

Fig. 3: Auto pilot of Hdot instruction in ACLS

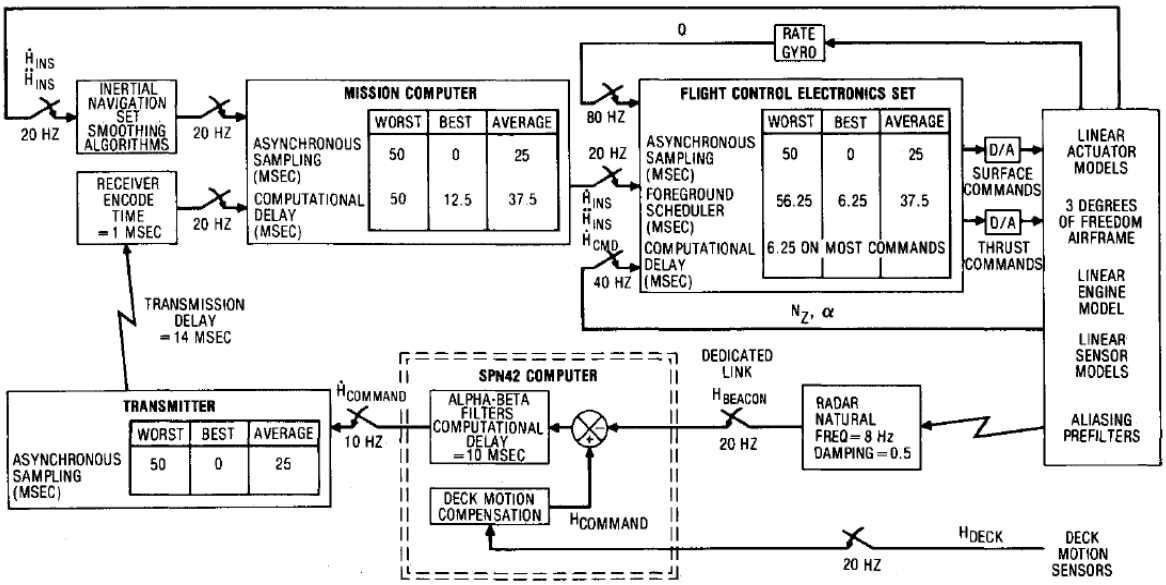

Fig. 4: ALCS system time delay

Figure 4 shows the digital characteristics in the ACLS control system, which also contains the SPN-42 radar system. The time delays of the variables in the excitation system, aerodynamics, engines and sensors, etc. are given (Urnes and Hess, 1985).

It is found that the time delays of ACLS consist of the asynchronous sampling time, the reception time, the calculating delay time and the transmission delay time. In the worst case, the total time delay is up to 0.2875s. In the best case, this value is 0.05s. The average case is 0.18125s.

The effect on system stability caused by time delays: By analyzing the time-domain response of the ACLS system, the effect on the system performance caused by time delays can be determined. Figure 5 compares the input response of the 1 m/s slope high command when there is a 0.5s time delay in the ACLS, with the

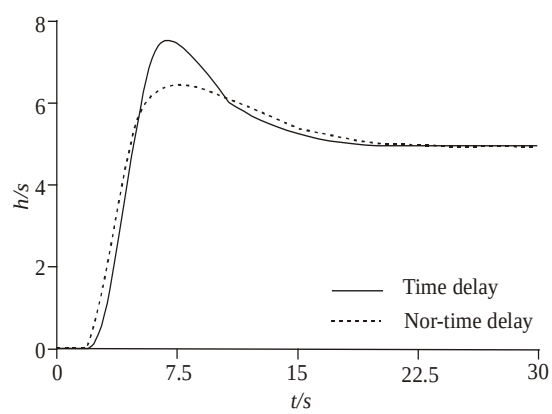

Fig. 5: Impacts on the step input response caused by the time delay

response of the original system where the time delay is not considered.

From Fig. 5, it is concluded that the impact on the overshoot of the system response caused by the time delay is huge. When the time delay of instructions is 0.5s, the overshoot of the response of the controlling system increases from 25% to more than 50%.

The influence of the errors in the designating system:

Error analysis of the radar booting device: Taking the AN/SPN-46 fully automatic landing system as an example, we analyze the booting error of the radar. AN/SPN-46 radar is set on the three "Nimitz" aircraft carriers: the "Roosevelt", the "Lincoln" and the "Washington".

- **Range rate error:** The range rate error of speed measuring radars contains the following parts:
  - **Change of the transmitter frequency:** According to the AN/SPN-46 booting radar of US, its frequency of work is 33200±200MHz and 9310±35MHz. The consequential error is:

$$E_{v0} = \frac{125}{10125} \times 100\% = 1.23\% \quad (1)$$

  - **Change of speed of light:** Take the maximal change of the speed of light---70km/s and the caused error is:

$$E_{v1} = \frac{0.0007}{2.997} \times 100\% = 0.023\% \quad (2)$$

  - **The error caused by the measuring approach:** When measuring the speed, the counter has an absolute error of ±1 pulse, so it leads to a relative error:

$$E_{v2} = \frac{1}{10^6} \times 100\% = 0.0002\% \quad (3)$$

  - The error caused by the instable clock frequency $E_{v3} \approx 0.005\%$
  - When the signal passes through the circuit, the inconsistency of the phase change leads to the error: $E_{v4} \approx 0.02\%$

To sum up, the total error is

$$E_v = \sqrt{E_{v0}^{\ 2} + E_{v1}^{\ 2} + E_{v2}^{\ 2} + E_{v3}^{\ 2} + E_{v4}^{\ 2}} = 1.2604\%$$

In addition, in order to obtain long-term storage and replay measurements for the Doppler signal, there is a tape recorder in the data processing device. When the signal is doing a replay measurement through the recorder, the fiducial error of the time of the tape recorder leads to an error up to 0.1%.

In sum, the AN/SPN-46 radar brings an error of ± 1.3604% when measuring the speed. When the range of the speed is 40-200kn (± 20.576- ± 102.89 m/s), the range of errors is ± 0.2799 m/s- ± 1.3997 m/s.

- **Angle error:** The levelness of the platform plays the most important role on the accuracy of angles measured by radars. The angle accuracy of the elevation by the Coordinate Measuring Machining is based on the standard horizontal plane. In order to isolate the multidirectional movement of the aircraft carrier caused by the waves, the radar is usually set on a stable platform. The current stable platform system is relatively mature. When in the three sea condition and when the speed is low, the accuracy of the local and stable platform with high precision is better than 1mrad. This totally satisfies the requirements of the designating device of the photoelectric landing.

- **Ranging error:** According to the ranging formula S = VT/2 = CT / 2, the accuracy of ranging is\ ΔS = CΔT/2 (4)

If the frequency of the time mark generator is 300 MHz and the measurement error of time intervals is one time cycle, the ranging error is:

$$\Delta S = C\Delta T / 2 = \pm(3\times10^8 / (300\times10^6)) / 2 = \pm 0.5m \quad (5)$$

Error analysis of the photoelectric designating device:

- **Analysis of ranging error:** Similarly as the principles of radars' ranging, if the frequency of the time mark generator is 300 MHz and the measurement error of time intervals is one time cycle, the ranging error is:

$$\Delta S = C\Delta T / 2 = \pm(3\times10^8 / (300\times10^6)) / 2 = \pm 0.5m \quad (6)$$

The ranging error is 0.5 m.

- **Analysis of angle error:** The scanning of sound and light deflections is a uniform rotation. The angular velocity is 30rpm, that is, 1.57 rad/s. When the ranging coverage is 20 km, the flight time interval of ranging laser pulses is about 20000/3×108 = 6.7×10-5s. So the maximum of possible errors of the scanning angle is 1.57×6.7×10-5 = 0.1mrad, which is smaller than the accuracy of a stable platform (1mrad). So, the measuring accuracy of the azimuth and the elevation angle mainly depends on the steady accuracy of the stable platform. That is, the angle

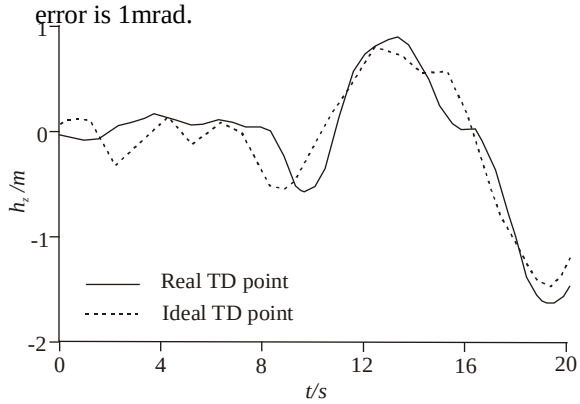

Fig. 6: The change of the ideal landing height and the simulation results of the height error

- **Analysis of range rate error:** The principle of ranging rate is to compute the differential of measured distances to the time. Suppose that the measured distance of the carrier aircraft at t_1 is S_1 and is S_2 at t_2. The velocity V of the carrier aircraft from t_1 to t_2 is:

$$V = (S_2 - S_1)/(t_2 - t_1) = (S_2 - S_1)/\Delta t \quad (7)$$

According to the formula of the error propagation, the ranging rate error is as follows, where ΔS are the accuracy of the measured distance:

$$\Delta V = (\Delta S_1 + \Delta S_2)/\Delta t = 2\Delta S/\Delta t \quad (8)$$

So, the accuracy of the ranging rate is determined by the accuracy of the measured distance and the time. As mentioned before, once the accuracy of the measured distance is ±0.5 m and the data frequency of the velocity is 1 Hz, the ranging rate error is ±1 m/s.

SIMULATION OF THE ACLS DESIGNATING PROCESS

Our study is based on the simulation of the inherent characteristics of aircrafts and the control system. According to the physical image of the F/A-18A ship landing and the work pattern of ACLS, we construct the simulation program to compute the final error of landing, do a fully numerical simulation in the time domain and analyze the results of the actual landing error.

The known conditions are: six-level sea condition, the speed of the aircraft is 69.964 m/s, the glide angle is -3.5°, the speed of the deck wind is 12.86 m/s.

Figure 6 shows the change of the ideal landing height in the 20s before the landing engagement, as well as the height error of the aircraft when arriving to the specified slip line. In this figure, we denote the increase of height as positive.

Table 1: Statistical properties analysis of the landing errors with different time delays

Sea condition	Time delay/s	Landing error	Final landing errors/m
6 level	0.2875	1	10.2452
	0.1926	1	10.0103
	0.1464	1	9.9100
	0.0981	1	9.8922
	0	1	9.8187

Table 2: Statistical properties analysis of the landing errors with different designating errors

Sea condition	Time delay/s	Designating error	Final landing error/m
6 level	0.18125	1	9.9968
	0.18125	0.66	9.6198
	0.18125	0.44	9.2905
	0.18125	0	9.2675

By Fig. 6 it can be concluded that, due to the delay of the instructions' transmission time and the delay effect of the high-level control system, the change of the flight height falls behind the motion of the ideal landing location. However, soon it can follow the change of the ideal landing height, until meshes with the landing motion.

STATISTICAL PROPERTIES ANALYSIS OF ALCS BOOTING ERRORS

The second and following pages should begin 1.0 inch (2.54 cm) from the top edge. On all pages, the bottom margin should be 1-3/16 inches (2.86 cm) from the bottom edge of the page for 8.5 x 11-inch paper; for A4 paper, approximately 1-5/8 inches (4.13 cm) from the bottom edge of the page.

Since the motions of waves and aircraft carriers are random variables, the landing errors are measured by the way of multiple simulations with the standard deviation.

As mentioned before, the time delay has a relation with the performance of the airborne and ship borne data transmission device, while the error of the designating device is determined by its own performance. So, the values of these two are independent and both can affect the final landing errors of the carrier aircrafts.

The distance of two arresting cables in the NIMIZ aircraft carrier is 12m. Take the midpoint of the 2nd and 3rd arresting cables as the ideal landing location. When the touch-ship point of the aircraft hook is in the 18m range of the ideal landing point, the landing can be secure.

The time delays are 0.2875s, 0.1926s, 0.1464s and 0.0981s successively. In the six sea condition, when the angle error, the range rate error and the ranging error all reach their maximum(marked by 1), we simulate the fully automatic carrier landing process 80 times, record the final landing error for each simulation and compute the standard derivation of the error as Table 1:

Decrease the designating error from the maximum (marked by 1) to 33% in proper order. In the six sea condition, when the time delay is 0.18125s (the average case mentioned in Sect. 3.1), we simulate the fully automatic landing process 80 times and record the final

Table 3: Statistical properties analysis of the landing errors with different designating errors

		Standard derivation of landing errors/m			
Sea conditions	Time delay/s	All designating errors	Only angle error	Only ranging rate error	Only ranging errors
6Level	0	9.8187	8.893	8.7357	8.7119
6Level	0.05	9.8898	8.8553	8.7903	8.5006
6 Level	0.18125	9.9968	9.1711	9.1876	8.9555
6 Level	0.2875	10.2452	9.4476	9.3146	9.2802

Table 4: Statistical properties analysis of the landing errors with or without designating errors when the time delays are different

Sea condition	Time delay	With designating errors	Without designating errors	Proportion increase (%)
6 sea condition	0	9.8187	8.9035	9.32
	0.05	9.8898	9.0249	8.74
	0.18125	9.9968	9.2675	6.64
	0.2875	10.2452	9.5005	6.35

landing error for each simulation and compute the standard derivation of the error as Table 2.

In addition, we consider the following cases: the six sea condition, maximum of the time delay 0.2875s, average of the time delay 0.18125s, minimum of the time delay 0.05s, no time delay. Also, we consider the four cases: taking all designating errors, taking only the angle error, taking only the ranging rate error and taking only the ranging errors. The standard derivation of the landing error is as Table 3.

From Table 1, when the sea condition is six-level and the time delay decreases by 33% in proper order, the standard derivation of final landing errors decreases 2.29, 0.99, 0.18%, respectively.

From Table 2, when the sea condition is six-level and the designating error decreases 33% successively from the maximum, the standard derivation of final landing errors decreases by 3.77, 3.42% respectively.

From Table 3, when the sea condition and the time delay are the same, the impacts caused by the angle error, the ranging rate error and the ranging error are as follows: the effect caused by the angle error is larger than that caused by the rate ranging error; the effect caused by the rate ranging error is larger than that caused by the ranging error; the disparity is slight.

From Table 4, it is concluded that when the designating error is maximal, the final landing errors increase 7.76% in average compared with the case that there is no designating error. When the time delay is the maximum, the final landing error increases to 5.51% in average compared with the case that no time delay exists.

So, compared with the time delay, the designating error has a greater impact on the final landing error. Also, the angle error has a slightly greater impact on the landing error than the ranging rate error, while the ranging rate error affects the landing error slightly more than the ranging error. To sum up, whether the designating error or the time delay exists, the impact on the final landing error of the fully automatic landing designating device should be minor in the normal working range

CONCLUSION

This study studies the factors affecting the accuracy of the fully automatic landing, which include data processing and transmission procedures, errors of designating devices and so on. We analyze and model the forming principles of different factors and simulate the process of fully automatic landing guidance. The major conclusions drawn by this study are as follows:

- The major factors that affect the accuracy of the fully automatic landing guidance summarized in this study include: time delay of the data process and transmission procedures, errors of the designating devices. The error of the designating devices has a greater impact than the time delay on the error of the final landing. In sum, whether the error of the designating devices or the time delay, both of them do not cause great influences on the accuracy of the fully automatic landing in the normal work range
- The angle error of designating devices has a slightly greater impact on the final landing errors than the ranging rate error and the ranging rate error has a slightly greater impact than the ranging error
- When taking the minimum of both the time delay and the error of the designating devices, the secure landing probability of aircrafts can increase by 2 to 3 percentage, than taking the maximum of these two values.

REFERENCES

Arthur, L., C. Prickett and J. Parkes, 2001. Fligth testing of the F/A-18E/F automatic carrier landing system. Proceedings of IEEE Aerospace Conference, 5: 2593-2612.

Bajpai, G., 1999. Control laws with hierarchical switch logic to accomodate EME-induced sensor failures. Proceedings of 18th Digital Avionics Systems Conference, 2: 10.C.3-1-10.C.3-4.

Boskovic, J.D., R.K. Mehra and C. Rago, 1998. A multiple model predictive scheme for fault-tolerant flight control design. Proceedings of the 37th IEEE Conference Decision and Control, 2: 1376-1381.

Craig, S.J., R.F. Ringland and I.L. Ashkenas, 1971. An Analysis of Navy Approach Power Compensator Problems and Requirements. Defense Technical Information Center, Ft. Belvoir, pp: 300.

Durand, T. and R. Wasicko, 1967. Fadas mluencing glide path control in curisr landing. AL4A J. Airc., 4(2): 146-158.

Huixin, T., L. Kun and M. Bo, 2011. A novel prediction modeling scheme based on multiple information fusion for day-ahead electricity price. Chinese Control and Decision Conference (CCDC), pp: 1801-1805.

Jex, H., A. Bml, W. Clement and I. Ashkenas, 1991. Dynamic model for carria approach lateral lincup. STI T~hnica Report No. 1272-1.

Narendra, K.S. and J. Balakrishnan, 1997. Adaptive control using multiple models. IEEE T. Automat. Contr., 42(2): 171-187.

Qidan, Z., Y. Yongtao, Z. Zhi, Z. Wen and W. Zixia, 2012. Design of approach power compensation system for carrier-based aircraft using conditional integral sliding surface. Proceeding of International on Information and Automation (ICIA). Shenyang, pp: 821-826.

Thomas, R., C. Stephen and H. Marshall, 2002. Review of the Carrier Approach Criteria for Carrier-based Aircraft. Naval Air Warface Center Aircraft Division, United States.

Urnes, J.M. and R.K. Hess, 1985. Development of the F/A-18A automatic carrier landing system. J. Guid., 8(3): 289-295.

Zhu, Q., 2009. Adaptive variable structure guidance system design of a longitudinal automatic carrier landing system. Proceedings of the 21st Annual International Conference on Chinese Control and Decision Conference, pp: 4855- 4859.