Research Journal of Applied Sciences, Engineering and Technology 5(14): 3767-3773, 2013
ISSN: 2040-7459; e-ISSN: 2040-7467

Submitted: September 15, 2012 Accepted: November 01, 2012 Published: April 20, 2013

# Application of Intelligent Algorithms for Optimal Distributed Generation Allocation to Voltage Profile Improvement and Line Losses Reduction

[1]Arman Tarrah, [2]Rasoul Asghari and [1]Masoud Aghazadeh Mehrabani
[1]Department of Electrical Engineering, Islamic Azad University, Lahijan Branch, Lahijan, Iran
[2]Department of Engineering, Islamic Azad University, Science and Research Branch, Tehran, Iran

**Abstract:** Distributed Generation (DG) had created a challenge an opportunity for developing various novel technologies in power generation. The rate and of DG implementation have to be determined. The increasing need of electricity and establishing powerhouses, as well as spending a great amount of time to built powerhouses, indicate the necessity of distributed generation in small size and close to the consumer location. In this study selecting IEEE-14 bus systems, attempt to investigate the effect of distributed generation in line losses and voltage profile by using two optimization techniques. The introduction of PSO and CSA base DG in a distribution System offer several benefits: Significant voltage profile improvement, Considerable line loss reduction, improves system reliability and etc. The optimum value of DG, also obtained increasing the maximum load ability of the system. Finally the results are compared to a system with and without installation DGs.

**Keywords:** Allocation, distributed generation, loss reduction, particle swarm optimization, voltage profile improvement

## INTRODUCTION

Distributed Generation which is at first offered for the access of high reliability for sensitive consumers has now been offered as one of suitable methods in providing power according to its considerable positive effect on generation and on the final price of power. The necessity of fundamental change in generation systems and energy transition has been taken for granted as power industry develops. In very early days once man feels he needs electricity energy more and more for different purposes, the energy generation was in the form of distributed generation. Distributed generation usually refers to generation of any kind of energy in pretty low capacities which is operated close to its location or the place of consuming without considering the used technologies which use recycled resources to generate power (Nara *et al*., 2001).

Considering high costs in transition and distribution, the distributed generators will be given this opportunity to provide cheaper generated power for customers. Practically, this system can be installed and used inside or near the location of the final consumer as a medium of power generation.

What makes power systems designers interested in establishing large power houses to generate power are to provide large consumption loads, heat efficiency increasing and exploitation costs? It is also significant to note that applying DG will not be always economically rescannable. After all, regarding other benefits of these generations, they will be helpful application. Some of its advantages are emergent power generation, power quality, high reliability, voltage security improvement and loss reduction (Khanjanzadeh *et al*., 2011b).

Distributed Generations be able to reduce the network losses for the reason that they produce the power in the nearness of load, so it is better to allocate DG units in places that they can supply a higher loss reduction. For the reason that DGs are so costly, loss reduction is a very essential object for DGs allocation. Power losses in distribution systems vary with various factors dependent on configuration of the system. Power losses being able to be divided into two parts: Reactive Power and Real Power. The reactive element causes the reactive losses and real power loss is produced due to the resistance of lines. Rahman *et al*. (2004), El-Khattam *et al*. (2004, 2005) and Khanjanzadeh *et al*. (2011a) in this study it is tried to reduce power loss as well as improving voltage profile.

**Problem statement:** The proposed work aims at minimizing the combined objective function designed to reduce power loss and also improve voltage profile. The main objective function is defined as:

$$\min f = P_{loss} + \sum_{i=0}^{n} \mu_p (1 - V_p)^2 \quad (1)$$

where,

$\mu_p$ = The penalty factor of bus voltages and is taken as 200

$P_{loss}$ = The real power loss obtained from the load flow solution at the base case

**Corresponding Author:** Arman Tarrah, Department of Electrical Engineering, Islamic Azad University, Lahijan Branch, Lahijan, Iran

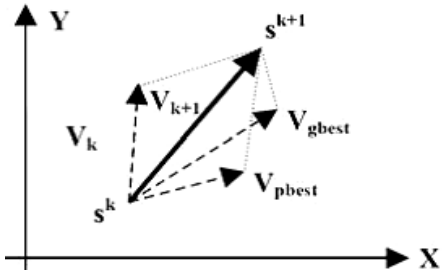


Fig. 1: Concept of a searching point by PSO

$V_P$ = The voltage profile of the buses

The fitness function is defined as:

$$fit = 1/(1+f) \quad (2)$$

## INTELLIGENT OPTIMIZATION

**Particle swarm optimization**: Particle Swarm Optimization (PSO) is a population-based optimization method first proposed by Kennedy and Eberhart (1995) inspired by social behavior of bird flocking or fish schooling (Kennedy and Eberhart, 1995). The PSO as an optimization tool provides a population-based search procedure in which individuals called particles change their position (state) with time. In a PSO system, particles fly around in a multidimensional search space. During flight, each particle adjusts its position according to its own experience (This value is called P best) and according to the experience of a neighboring particle (This value is called G best), made use of the best position encountered by itself and its neighbor (Fig. 1).

This modification can be represented by the concept of velocity. Velocity of each agent can be modified by the following equation:

$$V_{id}^{k+1} = V_{id}^{k+c} + C_1 \text{ rand} \times (P_{best_{id}} - S_{id}^{k}) + C_2 \text{ rand} \times (G_{best_{id}} - S_{id}^{k}) \quad (3)$$

By Using the above equation, a certain velocity, which gradually get close to $P_{best}$ and $G_{best}$ can be calculated? The current position (searching point in the solution space) can be modified by the following equation:

$$S_{id}^{(k+1)} = S_{id}^{k} + V_{id}^{(k+1)} \qquad i = 1,2,...,n \quad d = 1,2,...,m \quad (4)$$

where,
$S^k$ = Current searching point
$S^{k+1}$ = Modified searching point
$v^k$ = Current velocity
$v^{k+1}$ = Modified velocity of agent i
$vP_{best}$ = Velocity based on $P_{best}$
$vg_{best}$ t = Velocity based on $g_{best}$
n = Number of particles in a group
m = Number of members in a particle,
$P_{best}$ i = $P_{best}$ of agent i
$g_{best}$ i = $g_{best}$ of the group
$w_i$ = Weight function for velocity of agent i
$c_i$ = Weight coefficients for each term

The following weight function is used:

$$S_{id}^{(k+1)} = S_{id}^{k} + V_{id}^{(k+1)} \qquad i = 1,2,...,n \quad d = 1,2,...,m \quad (5)$$

where,
$S^k$ = Current searching point,
$S^{k+1}$ = Modified searching point,
$v^k$ = Current velocity,
$v^{k+1}$ = Modified velocity of agent i,
$vP_{best}$ = Velocity based on $P_{best}$,
$vg_{best}$ t = Velocity based on $g_{best}$
n = Number of particles in a group
m = Number of members in a particle,
$P_{best}$ i = $P_{best}$ of agent i,
$g_{best}$ i = $g_{best}$ of the group
$w_i$ = Weight function for velocity of agent i
$c_i$ = Weight coefficients for each term

The following weight function is used:

$$w_i = w_{max} - \frac{(w_{max} - w_{min})}{k_{max}} \; k \quad (6)$$

where, $w_{min}$ and $w_{max}$ are the minimum and maximum weights respectively. K and $k_{max}$ are the current and maximum iteration. Appropriate value ranges for $C_1$ and $C_2$ are 1 to 2, but 2 is the most appropriate in many cases. Appropriate values for $w_{min}$ and $w_{max}$ are 0.4 and 0.9 (Eberhart and Shi, 2000) respectively.

**Clonal selection algorithm:** The Clonal Selection theory proposed by Burnet is used to describe the basic features of an immune response to an antigenic stimulus (Ada and Nussle, 1987). According to this idea, only these cells proliferate that can recognize the antigen, thus are selected against those that do not (Kim and Bentley, 2002). Attracted by the biologic characters such as learning, memory and antibody diversity which are represented in the immune Clonal process, based on Clonal Selection theory some algorithms are proposed. This idea has been widely applied in some fields like intrusion detection (Dong *et al*., 2004), system control (De Castro and Von Zuben, 2002), optimization (Cortes and Coelho, 2003; Berek and Ziegner, 1993) and etc.

Nevertheless, these algorithms founded on Clonal Selection mechanisms are few and simple.

The calculation consequences are ungratified after solving complicated problem. Clonal Selection is shown in Fig. 2.

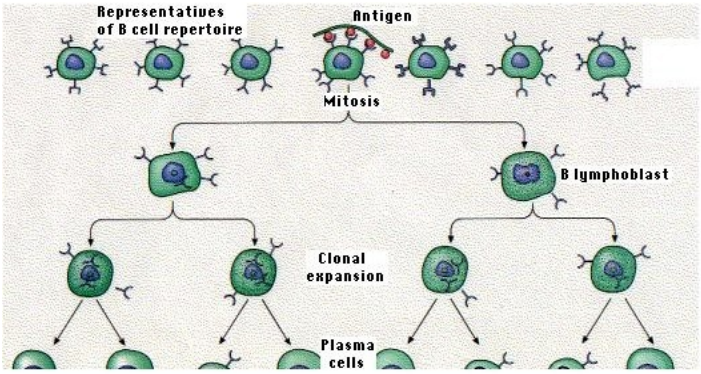


Fig. 2: Colonel selection

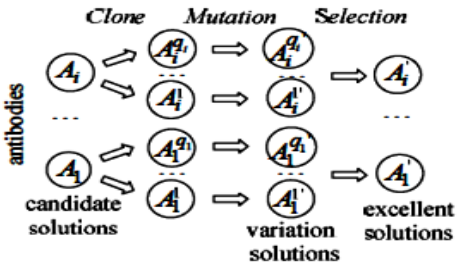


Fig. 3: Frame work of CSA

In this study, the power loss and the voltage security founded on the analysis of immunology and theory of Clonal Selection and finally compare to the Genetic Algorithm will be discussed.

The main idea of Clonal Selection theory lies in that antibodies can selectively react to the antigens, which are the native peptides on the cell surface. When exposed to antigens, the immune cells that recognize and eliminate the antigen presenting cells will be selected and arouse an effective response against them. This reaction leads clonally cell proliferation and the cells in colony have the same antibodies. Consequently, the process of Clonal Selection actually consists of three main steps: clone: descend a group of identical cells from a single common ancestor through asexual propagation. Mutation: gain higher affinity mainly through hyper mutation (Wang *et al*., 2000).

Assuming the objective function and restraining conditions of optimization are the antigens invading the body and candidate solutions are antibodies recognizing antigens, then the process of optimization can be considered as the reaction between antigens and antibodies and the affinity between the antigens and the antibodies are the matching degree between objective function and solutions. The optimization process includes two steps: first, the antibodies are gained, second, according to the Clonal Selection theory; the most capable antibodies are produced. The framework of clone selection optimization algorithms is shown in Fig. 3 (Mather *et al*., 2000).

## PROPOSED ALGORITHM

The principle of Clonal Selection is a form of natural selection (Berek and Ziegner, 1993). This describes the essential features which contain adequate diversity, discrimination of self and non-self and long-lasting immunologic memory.

The main idea of Clonal Selection theory lies in that the antibodies can selectively react to the antigens, which are the native production and spread on the cell surface in the form of peptides. When exposed to antigens, the immune cells that recognize and eliminate the antigens will be selected and arouse an effective response against them. The reaction leads to cell proliferating clonally and the colony has the same antibodies. Consequently, the process of Clonal Selection actually consists of three main steps: Clone: descend a group of identical cells from a single common ancestor through asexual propagation. Mutation: gain higher affinity mainly through hyper mutation (Gao *et al*., 2007). Selection: select some excellent individuals from the sub-population generated by Clonal proliferation. Assuming the objective function and restraining conditions of optimization are the antigens invading the body and candidate solutions are the antibodies recognizing antigens, then the process of optimization can be considered as the reaction between antigens and antibodies and the affinity between the antigens and the antibodies are the matching degree between objective function and solutions.

In this section, the proposed Clonal Selection Algorithm is presented and analyzed. Figure 4 shows the flow of the proposed algorithm. Generally, the proposed model can be described as follows:

**Step 1:** Initialize the population of antibodies that is, creating an initial pool of m antibodies randomly (candidate solutions ($Ab_1$, $Ab_2$, $Ab_m$)

**Step 2:** Compute the affinity of all antibodies ($A(Ab_1)A(Ab_2)A(Ab_m)$), where A (.) is the function to compute the affinity.

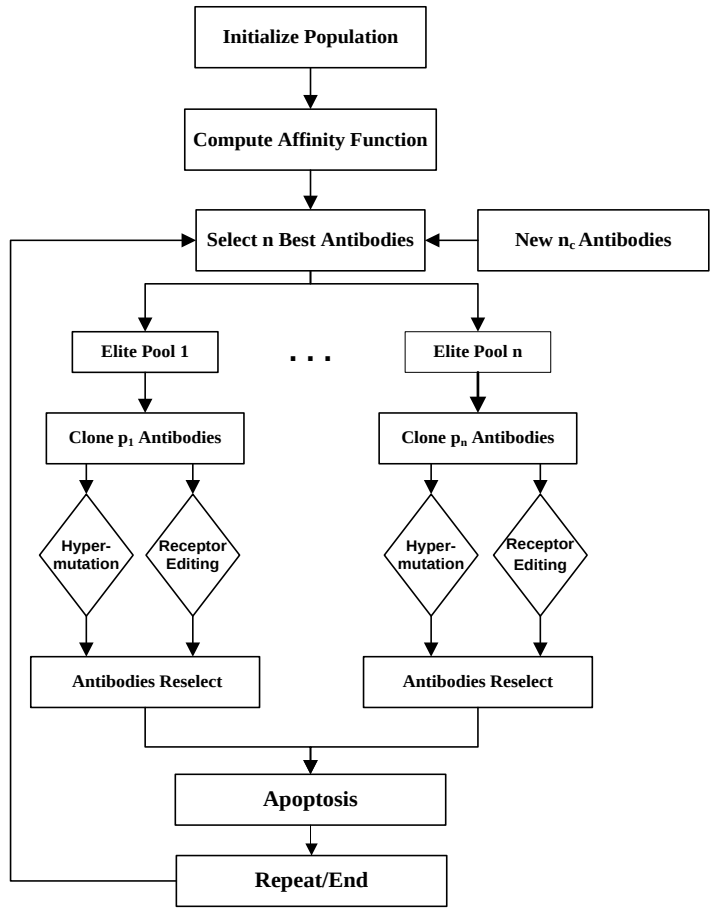


Fig. 4: Flowchart of colonel selection algorithm

**Step 3:** Select the n (n<m) best (fittest) individuals based on their affinities from the m original antibodies. These antibodies will be referred to as the elites.

**Step 4:** Place each of the n selected elites in n separate and distinct pools in a descending order of the affinity ($Ab_1$, $Ab_2$, $Ab_n$). They will be referred to as the elite pools.

**Step 5:** Clone the elites in each elite pool with a rate proportional to its fitness, i.e., the fitter the antibody, the more clones it will have. The amount of clone generated for these antibodies is given by:

$$P_i = \text{round}\left(\left(\frac{n-i}{n}\right)\times Q\right) \tag{7}$$

Q determines the scope of the clone and round (.) is the operator that rounds its argument towards the closest integer. After this step, we can obtain $\Sigma P_i$ antibodies just as:

$$(Ab_{1,1}, Ab_{1,2}, ..., Ab_{1,P_1}; ...; Ab_{n,1}, Ab_{n,2}, ..., Ab_{n,p_n})$$

**Step 6:** Subject the clones in each pool through either hyper mutation or receiver editing processes. Some of the clones in each elite pool undergo the hyper mutation process and the remainders of the clones pass the receiver editing process. The mutation number ( $P_{hm}$ and $P_{re}$ for hyper mutation and receptor editing, respectively) are defined as follows:

$$P_{hm} = \mu . p_i \tag{8}$$

$$P_{re} = (1-\mu).P_i \tag{9}$$

Which μ is user-defined parameter which determines the complementary intensity between the hyper mutation and receiver editing. In our perior work, we had demonstrated that an equivalent level of $P_{hm}$: $P_{re}$, that is, μ = 0.5 will lead the CSA algorithm to a better performance. After this step, we obtain $\Sigma P_i$ mutated antibodies just as:

$$(Ab'_{1,1}, Ab'_{1,2}, ..., Ab'_{1,P_1}; ...; Ab'_{n,1}, Ab'_{n,2}, ..., Ab'_{n,p_n})$$

**Step 7:** All of the mutated antibodies enter into a reselect process where the mutated ones $Ab'_{i,j}$ are judged to compare with their parent antibody $Ab_{i,j}$ according to the following updating rule:

$$Ab''_{i,j} = Ab_{i,j} \quad \text{if} \quad A(Ab_{i,j}) > (Ab'_{i,j})$$
$$Ab''_{i,j} = Ab'_{i,j} \quad \text{if} \quad A(Ab_{i,j}) \leq (Ab'_{i,j})$$

Then we can obtain $\Sigma P_i$ updated antibodies just as:

$$(Ab''_{1,1}, Ab''_{1,2}, ..., Ab''_{1,P_1}; ...; Ab''_{n,1}, Ab''_{n,2}, ..., Ab''_{n,p_n}).$$

**Step 8:** Determine the fittest individual $B_i(A(B_i) = \max\{(Ab''_{i,1}, Ab''_{i,2}, Ab''_{i,P1})\}$, i = 1, 2, …, n in each elite pool from amongst its updated clones.

**Step 9:** The n antibodies ($B_1$, $B_2$, …, $B_n$) are subjected to the apoptosis process in a descending order. The best m antibodies can survive and enter into the elite pools, the rest n-m antibodies are eliminated.

**Step 10:** Replace the worst c ($\eta$ = c/m) elite pools with new random antibodies earned once every k generations. It is interesting to point out that this step was expected to preserve the diversity and preserve the search from being trapped in local optima in CSA.

**Step 11:** Determine if the maximum number of generation $G_{max}$ to evolve is reached. If it is terminate and return the best antibody, if it is not, go to step 4.

Hyper mutation and receptor correcting play complementary roles in the act of affinity maturation. Hyper mutations allow the immune system to investigate the local area by making small variations and receiver accurately offers the ability to run away from local minima.

Table 1: Lines data

| From | To | Rohm | Xohm | B |
|---|---|---|---|---|
| 1 | 2 | 0.019 | 0.0592 | 0.053 |
| 1 | 5 | 0.054 | 0.223 | 0.049 |
| 2 | 3 | 0.047 | 0.198 | 0.044 |
| 2 | 4 | 0.058 | 0.1763 | 0.034 |
| 2 | 5 | 0.057 | 0.1739 | 0.035 |
| 3 | 4 | 0.067 | 0.171 | 0.013 |
| 4 | 5 | 0.013 | 0.0421 | 0 |
| 4 | 7 | 0 | 0.2091 | 0 |
| 4 | 9 | 0 | 0.5562 | 0 |
| 5 | 6 | 0 | 0.252 | 0 |
| 6 | 11 | 0.095 | 0.1989 | 0 |
| 6 | 12 | 0.123 | 0.2558 | 0 |
| 6 | 13 | 0.066 | 0.1303 | 0 |
| 7 | 8 | 0 | 0.1762 | 0 |
| 7 | 9 | 0 | 0.11 | 0 |
| 9 | 10 | 0.032 | 0.0845 | 0 |
| 9 | 14 | 0.127 | 0.2704 | 0 |
| 10 | 11 | 0.082 | 0.1921 | 0 |
| 12 | 13 | 0.221 | 0.1999 | 0 |
| 13 | 14 | 0.171 | 0.348 | 0 |

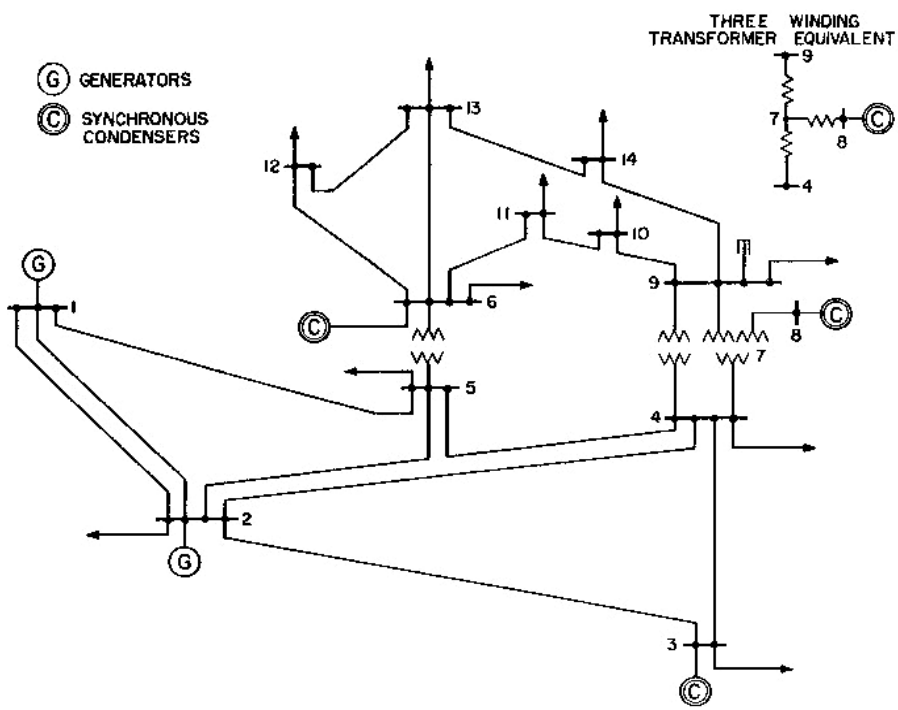


Fig. 5: Standard 14 bus IEEE system

Table 2: Buses data

| Bus number | P | Q |
|---|---|---|
| 1 | 0 | 0 |
| 2 | 21.7 | 12.7 |
| 3 | 94.2 | 19 |
| 4 | 47.8 | -3.9 |
| 5 | 7.6 | 1.6 |
| 6 | 11.2 | 7.5 |
| 7 | 0 | 0 |
| 8 | 0 | 0 |
| 9 | 29.5 | 16.6 |
| 10 | 9 | 5.8 |
| 11 | 3.5 | 1.8 |
| 12 | 6.1 | 1.6 |
| 13 | 13.5 | 5.8 |
| 14 | 14.9 | 5 |

Table 3: Results of power flow and harmonic power flow without installation of DG

| BUS | V(without DG) | V(with DG) PSO | V(with DG) CSA |
|---|---|---|---|
| 1 | 1.060 | 1.060 | 1.060 |
| 2 | 1.045 | 1.045 | 1.038 |
| 3 | 1.01 | 1.041 | 1.065 |
| 4 | 1.019 | 1.051 | 1.041 |
| 5 | 1.02 | 1.047 | 1.072 |
| 6 | 1.07 | 1.063 | 1.043 |
| 7 | 1.062 | 1.051 | 1.035 |
| 8 | 1.09 | 1.065 | 1.032 |
| 9 | 1.056 | 1.034 | 1.02 |
| 10 | 1.051 | 1.049 | 1.044 |
| 11 | 1.057 | 1.041 | 1.031 |
| 12 | 1.055 | 1.044 | 1.032 |
| 13 | 1.05 | 1.03 | 1.025 |
| 14 | 1.036 | 1.034 | 1.043 |

## CASE STUDY

Single line diagram of the network is illustrated in Fig. 5. It was selected from IEEE-14 bus system Network. Table 1 and 2 provide the data of lines and buses:

The bus system is with the total load of 259 MW and 73.5MVar. The original total real power loss and reactive power loss in the system are 13.393MW and 54 MVAR, respectively. Initially, a load flow was run for the case study with and without installation of DG. The results are illustrated in Table 3.

## SIMULATION RESULT

The impact of installing three DGs in the case study network with optimal sit and size is illustrated in Table 5. If the results of Table 3, 4 and 5 are compared, it can be concluded that with installing three DGs, the voltage magnitude is improved and fitness function is decreased. Figure 6 shows voltage profile of the case study network without and with three optimal DGs. In Table 3 results of voltage profile with and without installation of DGs are presented, respectively. These improvements are more in branches connected to buses that shown in Table 4.

These methods are implemented with MATLAB software.

Table 4: Fitness function without DG

| | Fitness function |
|---|---|
| Without DG installation | 0.74 |

Table 5: Optimum capacity and location

| Method | Bus no | Dg capacity | Fitness function |
|---|---|---|---|
| By PSO | 14 | 17.3MW- J14.6MVAR | 0.79 |
| | 4 | 20MW- J15.6MVAR | |
| | 10 | 16.7MW- J20MVAR | |
| | 8 | 17.1MW – J13.9Var | |
| By CSA | 4 | 19.8MW- J15.7VAR | 0.77 |
| | 12 | 16.9MW-J19.7VAr | |

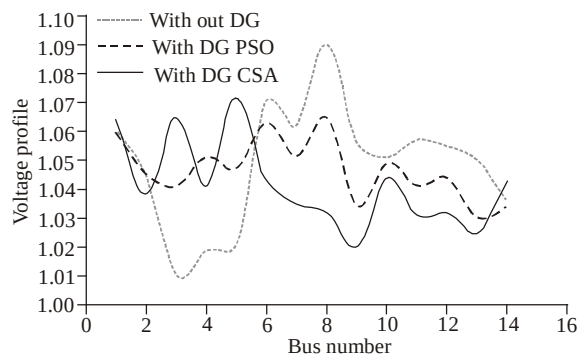


Fig. 6: Voltage profile without and with three optimal DG By PSO and CSA

## CONCLUSION

In this research, there are two optimization techniques have been tested to achieve the optimal place and size of DGs in distribution network. This study deals with the applicability of the intelligent optimization to optimize both place and size of DG in order to voltage improvement and line loss reduction.

Both sizing and locations of DG have to be considered together very carefully to capture the maximum benefits of DG. By analyzing and comparing the results, it is shown that PSO is more efficient than CSA to achieve the optimal performance for DG.

## REFERENCES

Ada, G.L. and G. Nussle, 1987. The colonel selection theory. Sci. Am., 257: 50-57.

Berek, C. and M. Ziegner, 1993. The maturation of the immune response. Immune Today, 14: 400-402.

Cortes, N.C. and C.A.C. Coelho, 2003. Multi objective optimization using ideas from the clonal selection principle. Lect. Note Comput. Sci., 2723: 158-170.

De Castro, L.N. and F.J. Von Zuben, 2002. Learning and optimization using the colonel selection principle. IEEE T. Evol. Comp., 6: 239-251.

Dong, H.K., H.J. Jae and H. Lee, 2004. Robust power plant control using colonel selection of immune

algorithm based multi objective. Proceeding of HIS, pp: 450-455.

Eberhart, R.C. and Y. Shi, 2000. Comparing inertial weights and constriction factor in particle Swarm optimization. Proceeding of the 2000 International Congress on Evaluating Computation, Santiago, California, IEEE Service Center, Piscataway, NJ, pp: 84-88.

El-Khattam, W., K. Bhattacharya, Y. Hegazy and M.M.A. Salama, 2004. Optimal investment planning for distributed generation in a competitive electricity market. IEEE Trans. Power Syst., 19: 1674-1684.

El-Khattam, W., Y.G. Hegazy and M.M.A. Salama, 2005. An integrated distributed generation optimization model for distribution system planning. IEEE Trans. Power Syst., 20: 1158-1165.

Gao, S., H. Dai, G. Yang and Z. Tang, 2007. A novel colonel selection algorithm and its application to traveling salesman problems. IEICE Trans. Fundamentals, E90-A (10): 2318-2325.

Kennedy, J. and R. Eberhart, 1995. Particle swarm optimization. Proceeding of IEEE International Conference on Neural Networks (ICNN), Perth, Australia, pp: 1942-1948.

Kim, J. and P. Bentley, 2002. Toward an artificial immune system for network intrusion detection: An investigation of dynamic colonel selection with a negative selection operator. Proceeding of the Congress on Evolutionary Computation (CEC), Seoul, Korea, pp: 1244-1252.

Khanjanzadeh, A., M. Sedighzadeh and A. Rezazade, 2011a. DG allocation using colonel selection algorithm (case) to minimize losses and improve voltage security. Int. Rev. Model. Simul. (I.RE.MO.S.), 4(1).

Khanjanzadeh, A., M. Sedighzadeh, A. Rezazade and A.H. Palauan, 2011b. Using colonel selection algorithm for sitting and sizing of distributed generation in distribution network to improve voltage profile and reduce THD and losses. Int. Rev. Electr. Eng-I., 6(3): 1325-1331.

Mather, M., S.B Karalee, S. Priyee, V.K. Jayaraman and B.D. kulkarni, 2000. Ant colony approach to continuous function optimization. Ind. Eng. Chem. Res., 39: 3814-3822.

Nara, K., Y. Hayashi, K. Ikeda and T. Ashizawa, 2001. Application of Taboo search to optimal placement of distributed generators. Proceeding of IEEE on Power Engineering Society Winter Meeting, Columbus, OH, pp: 918-923.

Rahman, T.K.A., S.R.A. Rahim and I. Musirin, 2004. Optimal allocation and sizing of embedded generators. Proceeding of National Power and Energy Conference, pp: 288-294, ISBN: 0-7803-8724-4.

Wang, N., D. Haifeng and W. Sun' an, 2000. School of Mechanical Engineering; 2. School of Public Policy and Administration Xi'an Jiaotong University Xi'an, China, Retrieved from: wangna@mail.xjtu.edu.cn.