Research Journal of Applied Sciences, Engineering and Technology 5(17): 4279-4283, 2013
ISSN: 2040-7459; e-ISSN: 2040-7467

Submitted: July 27, 2012 Accepted: September 17, 2012 Published: May 01, 2013

Design of CAN Bus Application in the Process of Papermaking

[1]Kaisheng Zhang, [1]Zhijian Li, [1]Xin Zhang and [2]Di Fan
[1]College of Light Industry and Energy of Shaanxi University of Science and Technology, Xi'an, 710021, P.R. China
[2]School of Information Engineering, Hebei University of Technology, Tianjin 300130, P.R. China

Abstract: In this study, we have a research of the design of can bus application in the process of papermaking. The design for an intelligent measure and control system based on the technology of CAN bus, is applied to detect and control the concentration of wood-pulp, the temperature of multistage dryer and other parameters in the process of papermaking, in order to meet the control requirements and characters for the study quality and ensure paper even and cohesive under the course of manufacturer. The intelligence of measure and control system has been predominantly researched in the article, including the proposal of intelligent control node and communication model, the design of hardware interface circuit in the intelligent measure and control node and the design of whole system.

Keywords: Application and design, CAN bus, intelligent measure and control papermaking

INTRODUCTION

CAN, the abbreviation of Controller Area Network, is designed by Germany BOSCH company as a serial communication network of bus type for the monitoring and controlling system in automobile and is also suitable for the communication connecting between the equipments and monitor in the industrial control process. The specification of CAN has been formulated by ISO (International Standardization Organization) as an international standard and widely used in the field of discrete control. The protocol of CAN, which has cohesion with the open systems interconnection model after being optimized, has a strong anti-interference capacity and high reliability (Li, 2006).

Known as an open, digital and multi-point communicational infrastructure control network, field bus is the system is application in the industrial produce to realize the bidirectional serial multi-node digital communication among the measure and control equipments embedded with microprocessors. In the real application, each single distributed measure and control equipments can be integrated as one network nodes, which are connected in the form of networking and controlling system to communicate with each one and to accomplish self-controlment, using field bus as the linker.

The emergency of field bus promotes the digitalization and networking of local equipment and enhances the control function. Due to the field bus, the openness of the process control system can be acquired, so it causes the system to be a control network with the general function of measurement, controlment, implement, process diagnosis, etc. Wu (2005) study the field bus and its application technology (Wu, 2005).

The local measure and control auto-system, in the process of making wood-pulp and paper, is the bridge where local information can be exchanged with the external world. In order to realize the integration of information in the course of produce and implement general automation, a communication system with the capacity of working in industrial locale, reliable performance and low-cost, should be designed for achieving the digital communication between the automatic and intelligent equipments by nodes to nodes and constituting the infrastructural network system of the factory. And, during the course of industrial controlment of wood-pulping and papermaking, lots of sensors and controllers are used and distributed in a wide field. If adopting the traditional method by one-device to one-device connection in the infrastructural layer, the negative results would be the extremely high cost of mounting and connecting material, the limited number of connecting terminal, the complexity of control, the inconvenience of maintenance. In addition, the local environment of wood-pulping and papermaking is bad. Therefore, an ideal solution is to connect all the sensors, transmitters and actuators together with one single bus wire, e.g., field bus and to communicate information between the network bridge and the controller that can be kept on with MAP carrier

Corresponding Author: Kaisheng Zhang, College of Light Industry and Energy of Shaanxi University of Science and Technology, Xi'an, 710021, P.R. China

band sub network. The field bus, based on the technology of CAN bus, is characterized by high speed communication, well reliability, low price, etc. and has been vastly applied in innumerable regions with the recognition as one of the most promising field bus (Shangfeng *et al*., 2007).

The design of CAN bus technology in the papermaking process includes: intelligent control node and communication model, hardware components of the intelligent control node and interface circuit; Based on the process of the papermaking and combined with the requirements of the various parameters on the control system, research and application of intelligent control technology has achieved great development. Because of control algorithms such as expert system and neural network control requiring a large amount of computation, using LPC2103 as the embedded processor is a good choose, that increases the computation capacity and memory space (Hao, 2008). Field bus based measurement and control is a combination of detection, conversion, computation, control, communication and other functions, with the advantages of simple structure, strong versatility, high reliability, low power consumption, so it can be applied to detection and control of concentration, temperature, pressure, flow and other parameters in pulping and papermaking process, in order to made good economic and social benefits.

In this study, we have a research of the design of can bus application in the process of papermaking. The design for an intelligent measure and control system based on the technology of CAN bus, is applied to detect and control the concentration of wood-pulp, the temperature of multistage dryer and other parameters in the process of papermaking, in order to meet the control requirements and characters for the paper quality and ensure paper even and cohesive under the course of manufacturer. The intelligence of measure and control system has been predominantly researched in the article, including the proposal of intelligent control node and communication model, the design of hardware interface circuit in the intelligent measure and control node and the design of whole system.

SYSTEM SOLUTIONS

Intelligent measure and control system is a typical application of microcomputer system, the combination product of computer, modern measurement, communication and network technology. Compared with traditional control system, intelligent measure and control system is better in measure speed, accuracy, sensitivity, degree of automation, cost performance and other aspects. Intelligent measure and control system becomes a direction of automatic control. Field bus is not only an open communication network but also a distributed control system. While regarding it as the link between intelligential measurement and control nodes, network system can be made up by intelligent measure and control nodes which has connection to bus as network nodes and can realize integrated automation functions by the way of constituting the automatic system, including basic control, compensation calculation, parameter modification, alarm, display, monitoring, optimization and control management. This is a comprehensive technology which focuses on intelligent sensor, control, computer, digital communication and networks. Field bus represents a development direction of automatic control which has the techniques of digitalizing locally, networking locally, controlling locally and devices managing locally and will be more and more widely used in the industrial field, especially in the multi-parameter, long delay control process, such as pulping and papermaking (Schmidt and Schimidt, 2007; Hespanha *et al*., 2007; Baillieul and Antsaklis, 2007).

The study machine is generally made up of flow head, wetter, webs, presser, dryer, smoother, roller and the papermaking process is shown in Fig. 1.

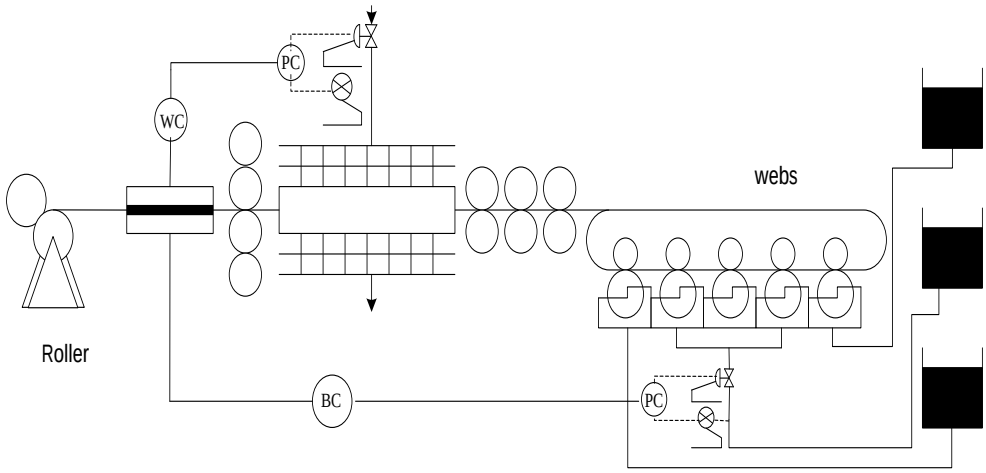

Fig. 1: Papermaking process

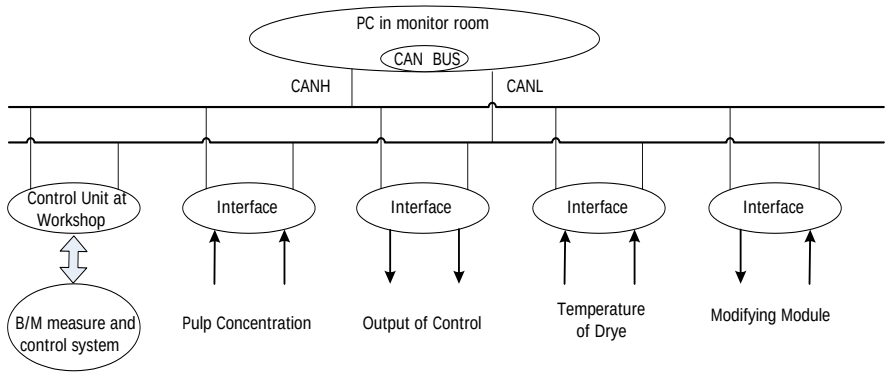

Fig. 2: System construction model

The process of papermaking is a complicated object with multi-procedure and the main control parameters include:

- Paper sheet ration, including related paper material concentration, quantity and dryer temperature
- Paper moisture, including related steam and pressure of condensate system, drying temperature
- Flow head pressure, liquid level and lip openness
- Paper machine normal operation parameters, including paper speed, copper webs displacement.

In order to ensure paper ration constant and paper moisture stable during papermaking process, correspondingly, inspection and control systems must be set on the machine, such as pulp concentration system, flow control, dryer steam pressure control and dryer temperature control, by this way, the pulp concentration, pulp flow, dryer pressure, pulp valve position, liquid level of box before webs, web speed, paper speed, steam pressure, steam flow and the other parameters can realize online detection, processing, control ,display the paper basis weight and moisture. These are the most basic technical parameters in paper making process. According to the balance of stuff during process, the balance formula of paper ration is denoted as follow:

$$w = \left(\frac{1-T}{1-T+L}\right) \times \frac{G1 \bullet C1}{Vd} = k\frac{G1 \bullet C1}{Vd} \tag{1}$$

where,

w	=	Ration of fully dry paper
$G1$	=	Amount of pulp into the machine
$C1$	=	Concentration of pulp into the machine
V	=	Web speed of paper machine
d	=	Width of paper machine
$(1-T)$	=	Ratio of pulp retention
L	=	Ratio of pulp loss

By formula (1), paper ration depends on pulp flow, pulp concentration and ratio of pulp retention, ratio of pulp loss, web speed and width. And retention of pulp, pulp loss rate, speed and copy width general changes a little in the normal operation of the machine, not the main factors affecting ration, so paper ration can be changed by slurry flow into the paper machine and pulp concentration.

According to the papermaking process requirements, paper page drying temperature curve shape should begin gradually to rise, then straight, finally falling slightly. And according to the different kinds of paper, the first few dryer temperature should gradually increase from 40~60 to 80~100°C, the temperature of two or three drying cylinder at the end of the drying sections is lower than the intermediate temperature, about 10-30°C. If heating too fastly or highly at the beginning, it will result in a lot of steam, paper loose, high porosity, increase of contraction and reduction of paper intensity and the degree of paper sizing. Due to the low moisture at the last segment, the high temperature will damage paper quality.

The design of control system based on CAN bus should not only be reliable and low-costs but also have strong universality, good real-time performance and flexible expansibility. Therefore, according to the research, the system model is divided into three layers: the field control layer, process monitoring and production management, as shown in Fig. 2. The system mainly consists of host computer and monitoring software, CAN intelligent network communication adapter based on PCI bus and corresponding device driver program WDM (Win32 Driver Mod), paper ration and moisture sensor module, a series of intelligent measure and control modules based on CAN bus (pulp concentration monitor, dryers steam temperature monitor) and other device units. This intelligent measure and control system based on CAN bus, using the microprocessor as the core and the digital communication mode, parameters such as paper ration, paper moisture, paper pulp concentration, steam temperature of drying cylinder can be detected and controlled by the system (Gao, 2008).

The host computer is typically a PC, because PC has a lot of PCI bus expansion slots. CAN intelligent network adapter which is inserted in PCI bus slots can

facilitate the communication between the system and other departments of produce management and realize the unification of control and management. In addition, selecting PC can also make full use of existing software tools and development platform. With its powerful graphical interface, visual programming and code maintenance and other features, users can develop a variety of excellent programs conveniently, for example, using VB or VC to develop a monitoring program based on the PC platform.

Intelligent control nodes at work site including paper ration and moisture sensor detection module, FBCAN intelligent measure and control modules based on field bus. The paper ration and moisture sensor detection module are mainly used to collect the real-time and online signal of paper ration and moisture and send the results to microprocessor and PC by the method of CAN protocol; FBCAN intelligent measure and control modules is used to connect apparatuses, sensors and actuators. In this way, FBCAN modules could collect, calculate, analysis and control the real-time signal data, such as pulp concentration and steam temperature of drying cylinder, at last transmit the data from work site to CAN intelligent network communication adapter by CAN bus. Then monitoring software based on the PC platform achieves data exchange with CAN intelligent communication network adapter by WDM driver, then reads, stores, displays the data received from CAN intelligent network communication adapter, so users can observe the real-time information intuitively. The users can also control corresponding actuators through PC monitoring software by the way of transmitting control information, the information was sent from CAN bus to corresponding units by using CAN intelligent communication network adapter. In the paper, research focused on the detection and control of changing data, such as pulp concentration and multi-stage dryer temperature in papermaking process. In the produce, vibrations of pulp concentration and dryer steam temperature are detected by sensors, after obtaining the corresponding signal from signal modulating and converting circuit, analog signal is sent to microprocessor as digital signal. According to resident control software, logic determine, microprocessor will execute data processing and information transportation and realize the corresponding functions of various process control (Wang *et al*., 2008).

The design of process monitor layer-the communication controller: Communication controller is very important in the field bus system, with the functions of node failure detection and data storage and can send field data to PC. Communication controller must be able to process data in time, store and monitor real-time data. The controller is a board card based on PCI bus, with the use of PCI interface chip CY7C09449PV which is produced by company Cypress. In order to realize parallel and high speed data communication, internal RAM with dual port is used as data communication buffer and telecommunications arbitration. All the communication controller and underlying intelligence sensor nodes communicating with PC should observe the protocol of CAN bus, which is suitable for industrial work site. Intelligent sensor nodes and intelligent sensors can communicate with PC through a high reliability data communication line which is established in the industrial field. The system uses field bus as a link and take the advantages of the processing capacities of intelligent nodes data and computer data processing, so each measure and control node dispersing at work site can form a intelligent sensor system, in which every nodes could communicate with each other and produce a is accurate, real-time and fast signal transmission.

HARDWARE DESIGN AND SOFTWARE DESIGN

The circuit structure of local intelligent measure and control node is shown in Fig. 3. It is mainly composed of four parts: embedded micro-control circuit, data collecting circuit, drive control circuit for output and control circuit for CAN bus communication interface.

The measure and control node uses microprocessor LPC2103 as its core and connects with the industrial workshop by optical coupling. Signal processing includes A/D and D/A converter circuit, low-pass filter circuit, signal amplification circuit, current/voltage converter circuit, input channels and output channels. The keyboard is used to set communication baud rate and communication address. CAN Communication controller and CAN transceiver are used to realize CAN network functions. In addition, the DC/DC power conversion module, it can convert input power from +24V to +5V or to some other required power. More relative details wouldn't be developed here.

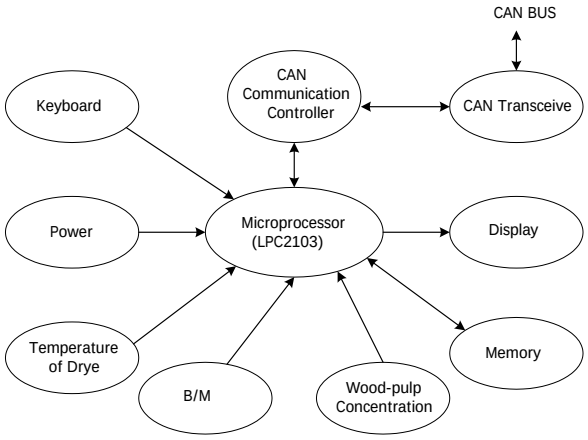

Fig. 3: Circuit structure of intelligent measure and control node

Data collection circuit contains pulp concentration detection, multi-stage dryer temperature detection, paper ration and moisture detection. Pulp concentration and the dryer temperature data collection circuit is mainly composed of pulp concentration transmitter, dryer temperature transmitter and signal process circuit. The sensors detect the changes of pulp concentration and dryer temperature and moisture ration device detects the ration, then the detected signal is sent to microprocessor.

CONCLUSION

Not only does the field bus is a open communication network, but also is a completely distributed control system. Being as the nodes on the bus, all the intelligent measure and control nodes are connected together by the field bus which plays a important role of junction, with a result of a formation of a network system. Further, the system constitutes a automatic system with a general auto-function that realizes the integrity of basic control, compensatory calculation, parameter modification, alarm, display, monitor, optimization and control management. The design for field bus application focuses on the intelligent control system that integrates intelligent sensor, controlment, computer, digital communication, network in itself. In contrary to traditional DCS control system, with the adoption of fully digitalized, distributed and open communication network, the intelligent control system based on field bus, has a high reliability, a good real-time performance and compatibility. Because of completely using the way of digital communication in the sub-layer which is deployed at the work site, the capacity of anti-interference and accuracy has been improved in the whole system and the mounting cost has been cut down by the layout method of field bus.

ACKNOWLEDGMENT

This study was supported by the Graduate Innovation Fund of Shanxi University of Science and Technology and by the Fund of Shanxi Technology Committee grant project 'Traffic Guidance System Based on the Embedded Technique' and goal-seeking.

REFERENCES

Baillieul, J. and P.J. Antsaklis, 2007. Control and communication challenges in networked real time systems [J]. Proc. IEEE, 95(1): 9-28.

Gao, J., 2008. Based on CAN bus technology for pulp consistency intelligent transmitter design [J]. Instrum. Tech. So., 4: 70-72.

Hao, L., 2008. DCS and Field Bus Control System [M]. East China University of Science and Technology Press, Shanghai.

Hespanha, J.P., P. Naghshtabrizi and Y. Xu, 2007. A survey of results in networked control systems [J]. Proc. IEEE, 95(1): 138-162.

Li, Z., 2006. Field Bus and its Application Technology [M]. Mechanical Industry Press, Beijing.

Schmidt, K. and E.G. Schimidt, 2007. Systematic message schedule construction for time-triggered CAN [C]. IEEE Trans. Veh. Technol., 56(6): 3431-3441.

Shangfeng, D., X. Cao and J. Xu, 2007. CAN Bus Control Technology and Its Application [M]. Publishing House of Electronics Industry, Beijing.

Wang, Y., Z. Ji and L. Xie, 2008. A dynamic scheduling based design approach for networked control systems [J]. Inform. Control., 37(1): 73-86.

Wu, K., 2005. Selected Works of the Application of Field Bus Technology [M]. Beihang University Press, Beijing.