Research Journal of Applied Sciences, Engineering and Technology 5(18): 4473-4478, 2013
ISSN: 2040-7459; e-ISSN: 2040-7467

Submitted: July 31, 2012 Accepted: September 17, 2012 Published: May 05, 2013

Simulation and Optimization of Turning-Milling Complex Machining

Anjiang Cai, Mingwei Ding, Shihong Guo and Hong Lin
Xi'an University of Architecture and Technology, Xi'an, Shaanxi, 710055, China

Abstract: In this study, the turning-milling complex processing simulation platform is established based on the simulation and optimization platform of VERICUT NC machining, with WFL M65 turning-milling complex machining center as the research object; taking barrel body parts as an example, the simulation machining and related process issues checking in machining process is made and the analysis and optimization of effect factors is made for processing efficiency. The application indicates that: the research results effectively realize the simulation of the turning-milling complex machining process and the correctness verification and process optimization of the NC machining program, improve the processing efficiency and the processing quality, well improve the application level of enterprise turning-milling complex machining center, promote the development of the turning-milling complex machining technology.

Keywords: Optimization, process checking, processing efficiency, simulation processing, turning-milling complex, VERICUT

INTRODUCTION

Complex machining technology is better valued as a new technology of multi specification, small batch and individual development needs that adapt to modern manufacturing; it is one of the important development directions of future manufacturing technology. Turning-milling complex machining has become one of most rapid development machining methods of complex machining field with its wide process range and strong processing ability (Choudhury and Bajpai, 2005). But the effect of turning-milling complex machining technology has not been fully realized in the manufacturing field now, the key reason is that the key technology of the application of turning-milling complex machining such as turning-milling complex machining process, NC programming technology, post-processing and simulation technology is still at the research stage (Stanislav, 2007). In this study, taking WFL M65 turning-milling complex machining center as the research object, studying on the key technology of the application of turning milling complex machining technology, development and custom of simulation system of turning-milling complex machining process, effectively realized the correctness verification of NC turning-milling complex machining program and the simulation and optimization of machining process, fully play to the processing efficiency of turning-milling complex machining center and further improving its application level. VERICUT is an advanced professional NC machining simulation software developed by GTECH of USA that run on Windows or Unix platform, it has strong functions of 3D manufacturing simulation, validation and optimization (Zhang, 2004; Yang, 2010). The construction of NC machining simulation platform mainly includes machine model establishing, machine motion parameters setting, machine control system configuration and tool library building (Won-Soo *et al.*, 2002). The correct NC program is provided for actual processing (Feng *et al.*, 2010).

In this study, the turning-milling complex processing simulation platform is established based on the simulation and optimization platform of VERICUT NC machining, with WFL M65 turning-milling complex machining center as the research object; taking barrel body parts as an example, the simulation machining and related process issues checking in machining process is made and the analysis and optimization of effect factors is made for processing efficiency. The application indicates that: the research results effectively realize the simulation of the turning-milling complex machining process and the correctness verification and process optimization of the NC machining program, improve the processing efficiency and the processing quality, well improve the application level of enterprise turning-milling complex machining center, promote the development of the turning-milling complex machining technology.

SIMULATION OF TURNING-MILLING COMPLEX MACHINING BASED ON VERICUT

Construction of turning-milling complex machining simulation platform: M65 turning-milling complex machining center produced in Austria WFL company is

Corresponding Author: Anjiang Cai, Xi'an University of Architecture and Technology, Xi'an, Shaanxi, 710055, China

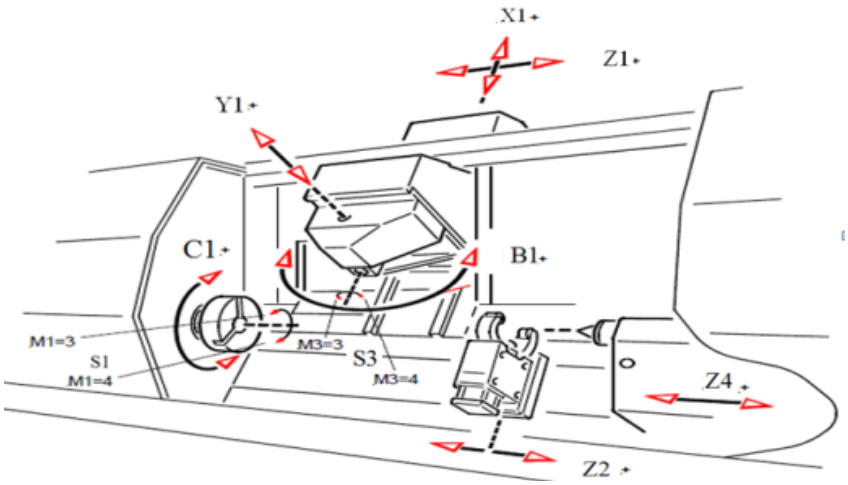

Fig. 1: Motion relation picture of turning-milling complex machining center

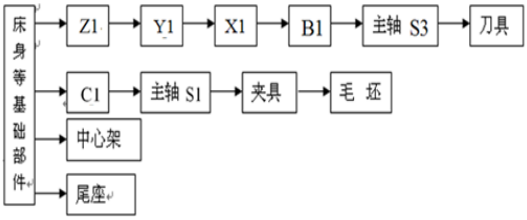

Fig. 2: Machine kinematic chain of M65 turning-milling complex machining center

a complex machining tool of seven-five axis, its NC system is SIEMENS 840D, uses the horizontal lathe layout, 60° inclined lathe bed, the left of the lathe bed is the turning-milling spindle box with C axis function. The upper part of the inclined lathe bed is turning, milling and boring spindle unit, it can follow the longitudinal (Z axis), lateral (X axis), radial (Y axis) for linear motion and make swing and rotary motion around the B axis. The machine has function of multiaxial interpolation linkage of X, Y, Z, B and C, it can achieve the machining tasks of turning, drilling, milling, grinding, gun drilling, internal and external gear processing, turning and milling complex, arc milling, as shown in Fig. 1.

This study studies on the simulation and optimization of turning-milling complex machining based on VERICUT with M65 turning-milling complex machining center as the research object and barrel body parts as example.

In this study, geometrical model of machine components (including bed, table, guide, etc.), fixture, blank of M65 turning-milling complex machining center is created based on CATIA, ensuring the internal and actual machine workspace relatively consistent and meeting the maximum stroke of each moving axis when round the dimensions of machine tool components. Each machine component is transferred into machine component tree of VERICUT in the .stl format. The machine kinematic chains establishing is the key to machine tool structure component tree, the machine kinematic chains of M65 turning-milling complex machining is shown in Fig. 2. At the same time completing the tool library construction in the VERICUT platform, using machine initialization function to set machine motion parameters, configuration machine tool NC system, etc. The construction of simulation platform of M65 turning-milling complex machining based on VERICUT is shown in Fig. 3.

The correct machine tool model establishing and machine tool control system configuration is the key to turning-milling complex machining simulation system. The machine tool model establishing should note the following aspects:

- Machine tool is settled under machine zero in order to ensure consistent with actual machine tool.
- The operation object is model, not the component if it needs to change the position and orientation of model when adding component model to the component.
- Distinguishing the relationship between component and model, component coordinate system and model coordinate system, paying attention to the absolute position and relative position.
- The relative position of each moving axis and actual position of machine tool should maintain consistency, especially the rotation axis, its direction and position must be consistent with the actual machine tool.
- The machine tool control system configuration should ensure the consistency between virtual machining process and actual machining process, generally selecting the NC code translation module in VERICUT that corresponding to NC system as the virtual machine tool controller module, making

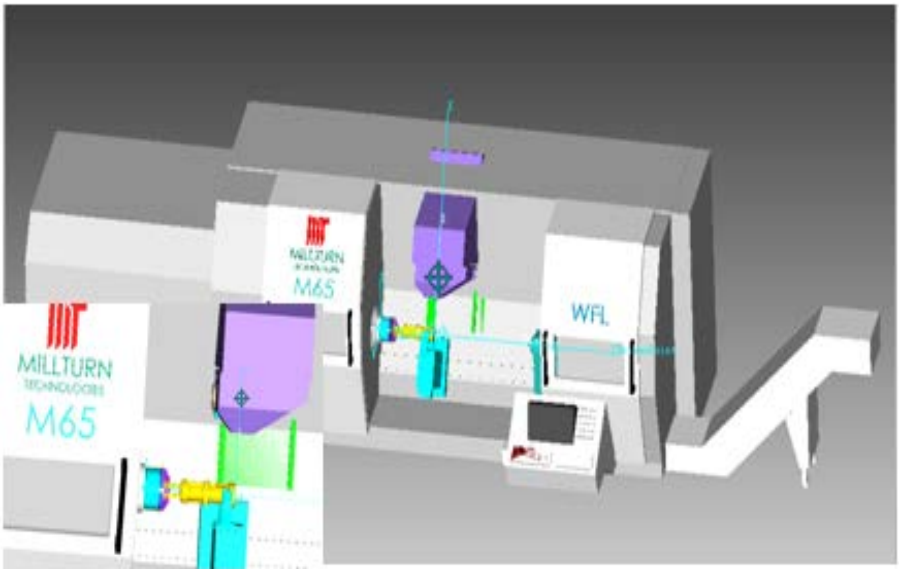

Fig. 3: Simulation platform of WFL M65 turning-milling complex machining

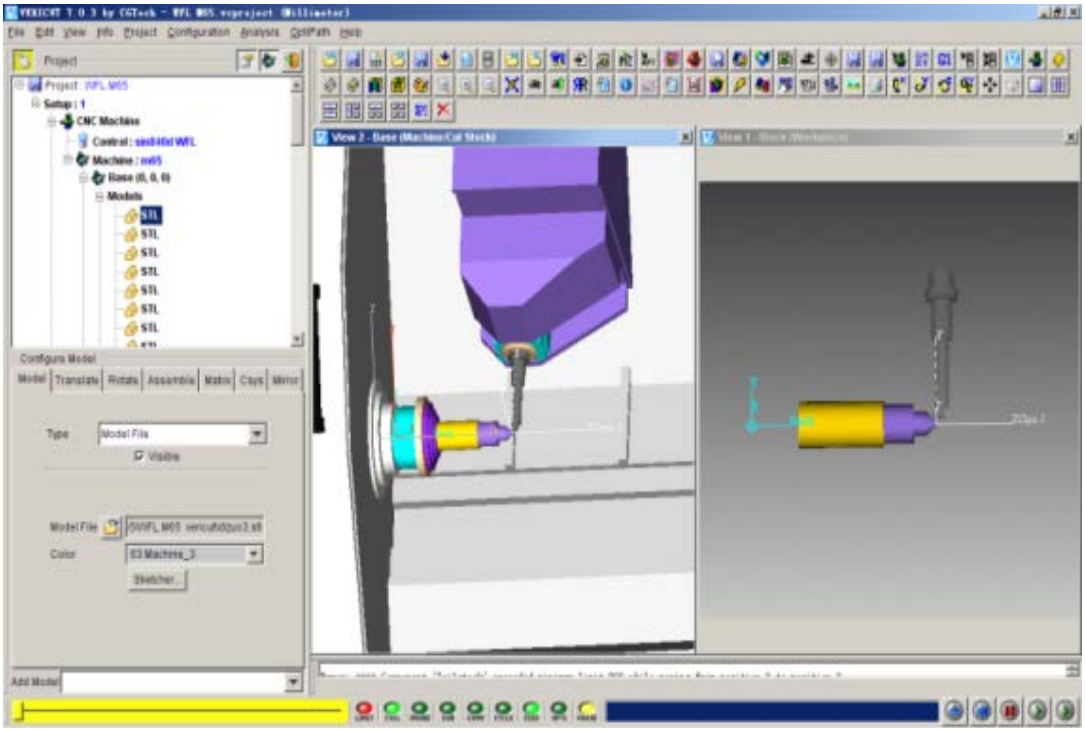

Fig. 4: Simulation of outer profile of rough turning barrel part

the secondary development and defining the related special instructions.

Simulation of turning-milling complex machining based on VERICUT: The part blank and fixture model is added, the NC program that processing this part is transferred, the machine tool NC system is loaded in the constructed M65 turning-milling complex machining simulation platform, that complete the simulation machining environment setting. The simulation function and detection function of VERICUT is used to fully display the entire process from blank to the parts cutting, as shown in Fig. 4, the operation process of the spindle, table, machine tool is displayed, whether existing abnormal conditions as processing interference, collision is checked and the safe and reliable operation of machine tool is ensured through zooming and rotating machining process animation; at the same time

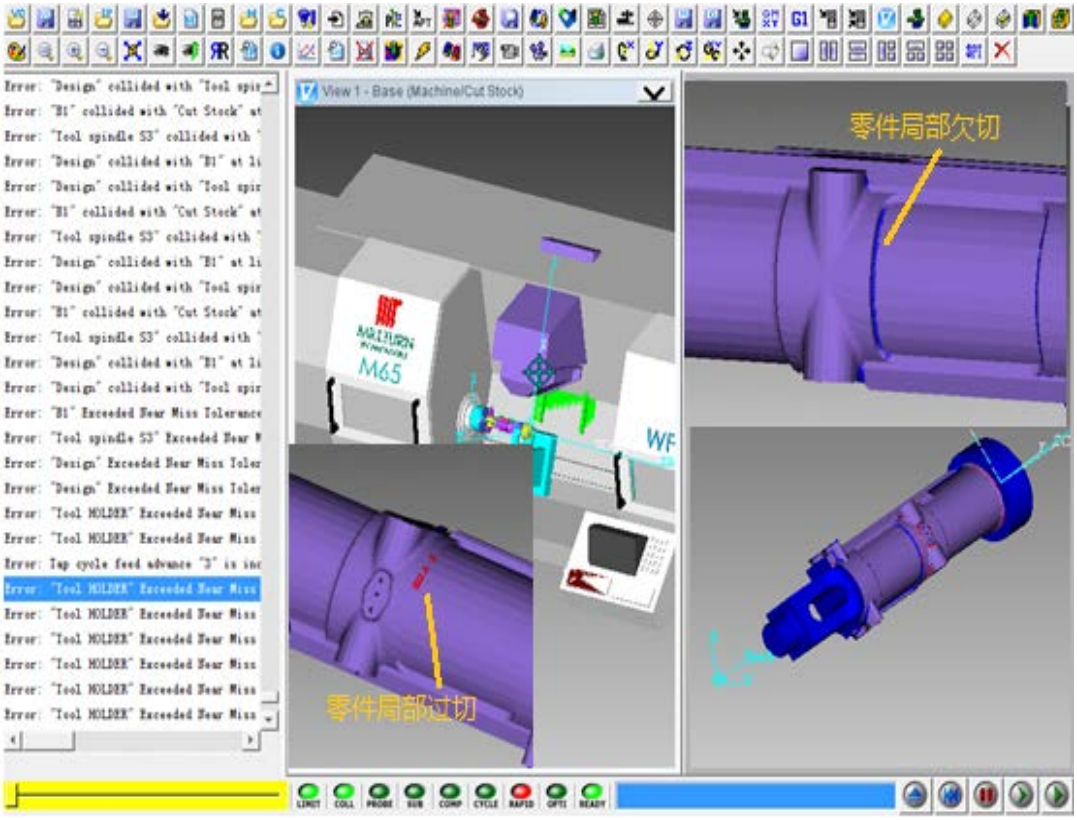

Fig. 5: Simulation of over cutting and owe cutting of machining work piece

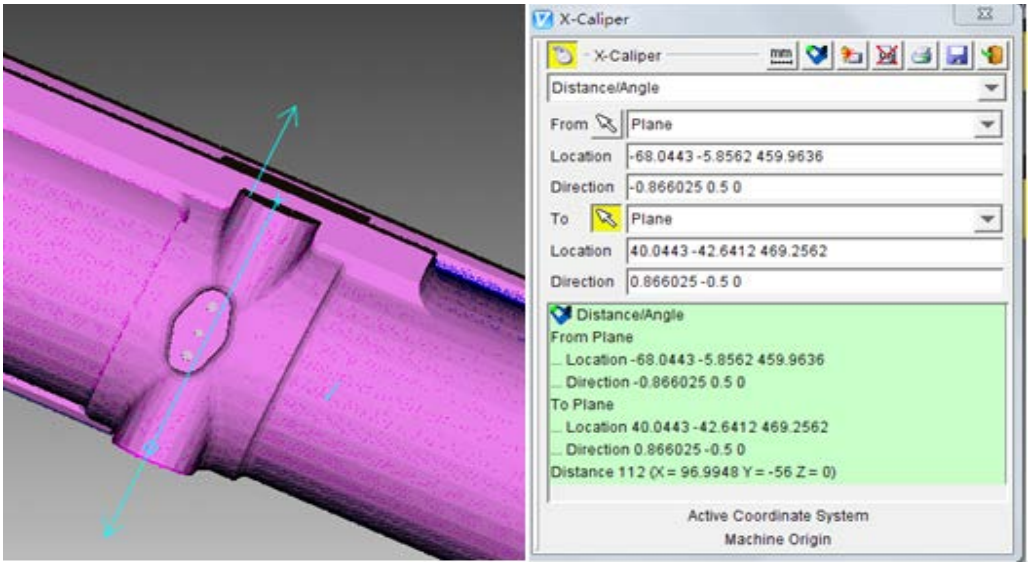

Fig. 6: Precision detection of simulation machining

the measurement and inspection for the geometry parameters and machining information of parts model of simulation machining is made, whether existing technology issues as over cutting or owe cutting in simulation machining process is checked.

The technology issues such as over cutting and owe cutting emerged in one machining process of barrel are shown in Fig. 5. Using system tool X-Caliper to measure work piece and observing whether the processing precision meet the required values is shown in Fig. 6. From the Fig. 6, it can be seen that the distance of X direction between the two steps is 96.9948, it also predict whether the processing precision would meet the design requirement.

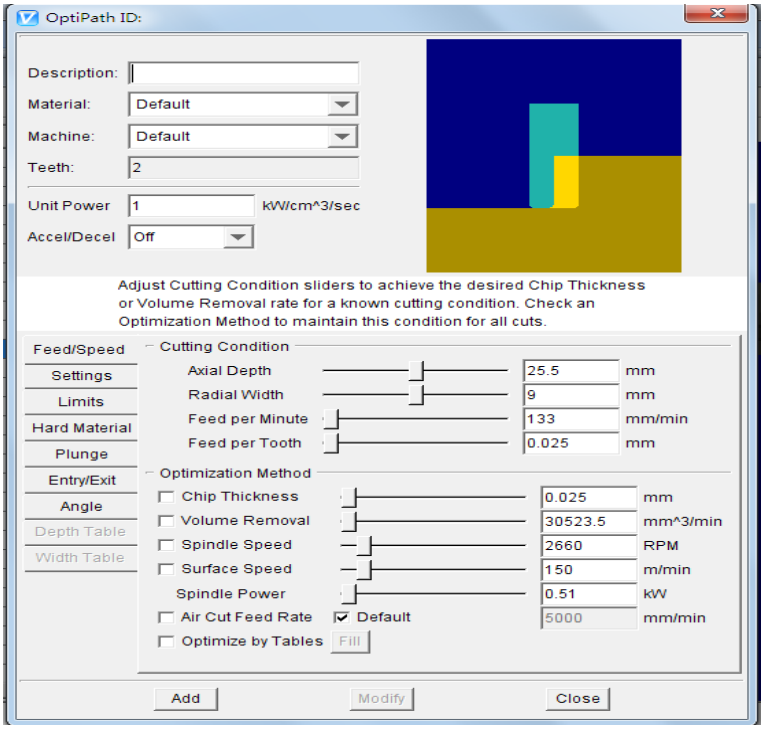

Fig. 7: Dialog box of tool library

EFFICIENCY OPTIMIZATION OF TURNING-MILLING COMPLEX MACHINING BASED ON VERICUT

Improving the machining efficiency is reducing the basic machining time of parts. The main factor that affecting the basic machining time of turning-milling complex machining parts is the spindle speed and feed rate (Jin *et al.*, 2010), so the optimization of spindle speed and feed rate is mainly adopted when using VERICUT to make technology optimization. Calculating the cutting value of each program step and making comparison with the experience value of cutting parameters of tool library or the tool cutting parameters recommended by cutting tools manufacturers through inputting the tool path, reducing the speed when the actual cutting qualities are larger than the parameter values; and improving the speed when the cutting allowances are less than the parameter values. The VERICUT just modifies the spindle speed and feed rate, not modifies the tool path of original program when optimizing the NC program, the modified values are rewrite to the original program, so the optimized results will not produce any collision process problems.

The optimization model of VERICUT provides constraint conditions of automatically setting optimization, automatic calculates the objective function that the function of cutting machining time. VERICUT mainly provides two tool path optimization methods of constant volume removal rate cutting and constant chipping thickness. The optimization method of constant volume removal rate cutting is mainly used for rough machining; the purpose is removal material soon and achieving constant material removal amount under different cutting conditions. The optimization of constant chipping thickness method is mainly used for semi finishing and finishes machining, improving the machining efficiency, extending the tool life and ensuring the machining quality through changing the feed rate and maintaining a constant chipping thickness when it is cutted.

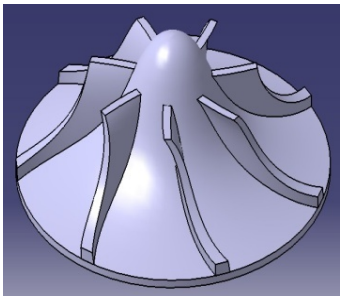

Fig. 8: Impeller model

The tool path optimization based on VERICUT is divided into two steps that establishing and calling of optimization tool library. The optimization tool library of VERICUT is used for setting the optimization data of different tools such as feed rate and spindle speed under different cutting conditions, as shown in Fig. 7.

In this study, the simulation machining conforms the optimal optimization parameters of impeller blades

processed in M65 turning-milling complex center (as shown in Fig. 8), completes the setting of optimization parameters of parts machining and establishing optimization tool library combined with field machining experience and through the constantly adjust ion of the optimization parameters. The blade machining program of this part can be optimized by calling the optimization tool library, the optimization results can be analyzed through status and graphs after the optimization of machining program. The total machining time of optimized NC program of impeller blade can be saved 12.62% compared with the original. It can be seen from comparing pre and post optimization that the optimization of VERICUT has not changed the tool path of original program, but VERICUT interrupts the original one step program into multistage and inserts new feeding to each section according to the settled optimization parameters when finding the path of one step of NC program is long and its chipping allowances are changing and cutting speed needs optimization and adjust ion, this ensures improving the machining efficiency and won't modify the original program. The amount of the division section number of NC program depends on the resolution size stetted when establishing optimization tool library, the program segment is divided more detailed when the resolution is smaller.

CONCLUSION

The construction of virtual machining system, substituting the test cutting, solving the correctness of NC program and optimization of machining process are important ways to enhance the using performance and efficiency of turning-milling complex machining center. In this study, the constructed turning-milling complex machining simulation platform based on VERICUT uses the optimization model of VERICUT to achieve the study of the optimization of the machining efficiency, that provides guiding methods and reference examples for five axis linkage turning-milling complex machining simulation technology of complex surface, it also settles the technology issues in the manufacture of turning-milling complex machining, reduces the test cutting processing and improves the machining efficiency and quality.

REFERENCES

Choudhury, S.K. and J.B. Bajpai, 2005. Investigation in orthogonal turn-milling towards better surface finish. J. Mater. Proc. Technol., 170(3): 487-493.

Feng, S., Y. Wu, B. Hou, *et al*., 2010. Simulation optimization of tool cutting parameters based on VERICUT [J]. Manuf. Autom., 32(6): 47-49.

Jin, C., L. Sui and C. Xu, 2010. Optimization of cutting amount of orthogonal turning-milling complex machining [J]. J. Shen Yang Ligong University, 29(5): 60-63.

Stanislav, M., 2007. Optimization and correction of the tool path of the five-axis milling machine [J]. Math. Comp. Simulat. 75: 231-250.

Won-Soo, Y., H.K. Jeong, U.L. Han, D.W. Cho and K.F. Ehmann, 2002. Development of a virtual machining system, part 3: Cutting process simulation in transient cuts [J]. Int. J. Mach. Tools Manuf., 42: 1617-1626.

Yang, S., 2010. Vericut Nc Machining Simulation Technology [M]. Tsinghua University Press, Beijing.

Zhang, C., 2004. Application of virtual manufacturing technology based on vericut [J]. J. HeFei University Technol., 1: 15-18.