Research Journal of Applied Sciences, Engineering and Technology 6(9): 1523-1530, 2013
ISSN: 2040-7459; e-ISSN: 2040-7467

Submitted: October 17, 2012 Accepted: December 12, 2012 Published: July 15, 2013

Risk Identification for the Construction Phases of the Large Bridge Based on WBS-RBS

Qing-Fu Li, Peng Zhang and Yan-Chao Fu
School of Water Conservancy and Environment Engineering,
Zhengzhou University, Zhengzhou 450001, China

Abstract: For the construction environment of large bridges is complex and there are too much uncertain factors during the course of the construction, it is difficult for the general method of risk identification to identify the risks wholly and systematically. This study presents a new method of risk identification with modular analysis based on WBS-RBS (Work Breakdown Structure-Risk Breakdown Structure). For the purpose of the better application of this new method in the risk identification of large bridges, a BCICS (Bridge Construction Information Classification System) suitable for construction phase of large bridges was established based on the information classification system of ISO (International Standardization Organization). In order to provide a uniform communication language for the risk analysis personnel, the WBS of the construction of large bridges was established, which was beneficial to the judgment of the matrix elements of the RBM (Risk Breakdown Structure) applying the method of NGT (Nominal Group Technique). The coding system based on BCICS and RBS presented in this study is convenient for the modularized computer storage of the risk information of large bridges in construction phase and has great contribution to establishing the risk database of large bridges in construction phase.

Keywords: Construction risk, large bridge, Risk Breakdown Structure (RBS), risk identification, Work Breakdown Structure (WBS)

INTRODUCTION

With the development of structural mechanics and computational mechanics and with the development and application of new construction materials, the technology of bridge construction has been improved greatly. The span of bridge becomes larger and larger and the bridge structure becomes more and more complex (Greenstein, 2011; Voo *et al*., 2011). Bridge construction is a complex and systematic work and there are a variety of risks all the time during the whole phase of bridge construction from construction preparation to construction completion. During the construction phase of a bridge, plenty of work is high above the ground; as a result, the construction of bridges has higher risk compared with the other engineering construction. The occurrence of risk accidents in the phase of bridge construction will lead to great losses to the proprietor and construction enterprises if the construction risk of the bridge has not been paid more attention (Ji and Fu, 2010; Zheng *et al*., 2008). The risk accidents will has adverse effect on the regular bridge construction and it may interrupt the bridge construction. For the large bridge, the investment of which is so huge, the technology is very complex and the construction period is too long. When the accident of the large bridge in construction phase occurs, the property damage and personal injury is more serious than the ordinary bridge. Therefore, the risk management of large bridges in construction phase has great significance to prevent the occurrence of construction accidents of large bridges.

Quite a lot of research has been done to identify and assess the bridge risk. For example, Stein *et al*. (1999) developed a risk-based method for assessing the risk associated with scour threat to bridge foundations (Stewart, 2001) presented a broad overview of the concepts, methodology and immediate applications of risk-based assessments of bridges. In particular, two practical applications of reliability-based bridge assessment are considered-risk ranking and life-cycle cost analysis (Higgins *et al*., 2005) proposed an assessment and risk-ranking methodology that incorporates moment-shear interaction Based on alpha level sets, Wang and Elhag (2006, 2007) proposed a fuzzy TOPSIS method and a Fuzzy Group Decision Making (FGDM) approach for bridge risk assessment and presented a Nonlinear Programming (NLP) solution procedure. For the purpose of bridge design against vessel impacts, Geng *et al*. (2007) proposed a framework of risk assessment system, which consists of five sub-systems: data base for vessel-bridge collision assessment, bridge safety assessment module, risk

Corresponding Author: Peng Zhang, School of Water Conservancy and Environment Engineering, Zhengzhou University, No. 100 Science Road, Zhengzhou 450001, China

acceptance criteria, active collision-prevention scheme design and passive structure-protection scheme design. Elhag and Wang (2007) presented an application of artificial neural networks in bridge risk assessment, in which back-propagation neural networks are developed to model bridge risk score and risk categories. Zayed *et al*. (2007) proposed a Risk index (R) that assessed risk and prioritizes bridges with unknown foundations.

Primary risk parameters and their factors for bridges with unknown foundations were identified and analyzed and a model for calculating R was designed. Mander *et al*. (2007) applied Incremental Dynamic Analysis (IDA) in a performance-based earthquake engineering context to investigate expected structural response, damage outcomes and financial loss from highway bridges. Wang and Elhag (2008) developed an Adaptive Neural-Fuzzy System (ANFIS) using 506 bridge maintenance projects for bridge risk assessment. Wang *et al*. (2008) proposed an integrated AHP-DEA methodology to evaluate bridge risks of hundreds or thousands of bridge structures, based on which the maintenance priorities of the bridge structures can be decided. Cho and Kim (2008) dealt with the quantitative risk assessment for the construction phases of the suspension bridge to evaluate the risks in a suspension bridge by considering an ultimate limit state for the fracture of main cable wires and to evaluate the risks for a limit state for the erection control during construction stages. Khan and Datta (2010) presented a fragility analysis of a fan type cable stayed bridge using a Probabilistic Risk Analysis (PRA) to determine its probability of failure under random ground motion. Padgett *et al*. (2010) presented the results of a seismic risk assessment of the bridge network in Charleston, South Carolina and the surrounding counties to support emergency planning efforts and for prioritization of bridge retrofit. Xiang *et al*. (2010) proposed the evaluation indexes system of bridge design risk and determined the weightings of risk factors based on Analytical Hierarchy Process (AHP). Deco and Frangopol (2011) provided a rational framework for the quantitative risk assessment of highway bridges under multiple hazards.

The above literature review clearly shows that there are many methods for the risk identification and assessment of the existing bridge. However, little information is presently known on the risk identification of large bridges in construction phase. Therefore, we conducted this study to identify the risk of large bridges in construction phase applying the method of WBS-RBS (Work Breakdown Structure-Risk Breakdown Structure).

WBS-RBS METHOD OF RISK IDENTIFICATION

Basic principles of WBS-RBS: WBS (Work Breakdown Structure) is a grouping mode of project elements facing to the deliverables, which organizes and defines all the working ranges of the project

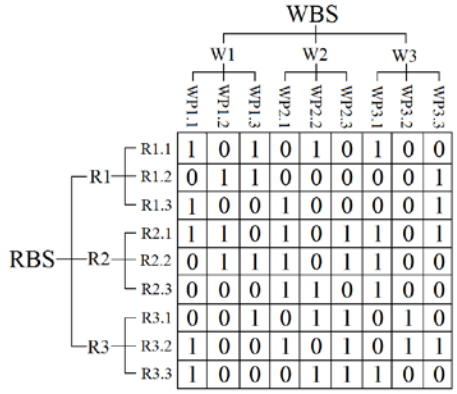

Fig. 1: Risk Breakdown Matrix (RBM)

(Gregory, 2005). The sub-grade of WBS represents a more detailed project work. WP (Work Package) is the lowest grade work of WBS, which presents the logical basis to define the activities and specifically assigned works to the individual and organization. In risk management, WP is the elementary unit of risk identification. As a result, for the convenient risk identification, the work should be broken down into the level of WP step by step when WBS is being structured. RBS (Risk Breakdown Structure) is a hierarchical structure of the potential risk sources. Referring to the defining of WBS, RBS can be defined as a grouping mode of project risks facing to the source, which organizes and defines all the risks of the project (David, 2003). The sub-grade of RBS represents a more detailed project risk source. After RBS was presented for the first time, David *et al*. (2006) innovatively combined WBS and RBS to obtain the RBM (Risk Breakdown Matrix) for the purpose of the risk analysis of project, which is shown in Fig. 1. In brief, the basic principles on WBS-RBS of risk identification is that the risk of each WP in the effective working range defined in WBS will be identified according to the specific risk factors defined in RBS on the basis of establishing reasonable WBS and RBS.

Basic steps of WBS-RBS: The basic steps of risk identification based on WBS-RBS can be summarized as:

- Establishing WBS
- Establishing RBS
- Establishing RBM by combining WBS and RBM
- Judging the possibilities for the risk existence and the risk alteration conditions

According to the RBM, each risk factor in WP should be judged one by one. If the risk factor exists, the corresponding risk value in RBM is 1 and on the contrary, the corresponding risk value in RBM is 0 if the risk factor doesn't exist, or there is too little possibility for the risk taking place. The risk should be urgently noticed during the course of the project

implementation and the project stage, when the risk exists in, can be definitely known by dealing with the risk values in RBM.

Advantages of WBS-RBS method for risk identification: From the basic steps and principles, it can be seen that WBS-RBS method has the following advantages compare with the other methods of risk identification. First, by establishing WBS, the project work can be detailed into WP step by step, which is convenient to identify the risk. Then the risk of each WP in WBS can be identified according to RBS. This method can both grasp the global vision for the project and go deep into the details of the project implementation. Second, by establishing WBS, the risks of the project can be classified and divided into levels, which is convenient for the risk analysis personnel to clearly, systematically and effectively identify the risks. As a result, it can prevent missing some risk factor and repeatedly counting the same risk. Furthermore, by establishing WBS, the risks occurred in different stage of the project is clear at a glance, which is convenient for the risk management personnel to distinguish and analyze the risks. Besides, this hierarchic structure of Work-Risk is convenient for the collection, treatment, storage, examination and management of the risk information of the engineering project and it is convenient for the establishment of the dynamic database of the risk source.

CONSTRUCTION RISK IDENTIFICATION BASED ON WBS-RBS

Establishing WBS of the large bridge construction: Generally, the uniform information classification system is used inside each of the participant organization of the project in order to ensure that the internal information can be transmitted smoothly. The different information classification system for different organizations will frequently produce interface barriers. Therefore, the same information classification system must be adopted in order to establish a uniform WBS. Thus, all the participants of the project can understand the WBS and the interface barriers can be avoided. Moreover, the information transmission and risk communication between different organizations can keep smooth. ISO (International Organization for Standardization) technological association has put forward a new information classification system for the construction profession. In this information classification system, the construction information has been divided into 8 facets, which include facility, space, element, work section, construction products, construction aids, management and attributes (ISO, 1994). Based on the information classification system of ISO, a Bridge Construction Information Classification System (BCICS) suitable for construction phase can be established.

The structural system of BCICS adopts 3 facets structure, which include bridge, subproject and work section. Bridge facet can be defined that the bridge types are classified according to the attributes of bridges, such as materials and structure forms. The subproject of the bridge can be classified according to the physical or functional component of the bridge. The subprojects of the bridge can be classified into 3 classes, which include the main stress structures, bridge floor system and accessory structures and each class still can be further classified. The classification of the work sections of the bridge has direct relation to the construction technology process adopted in the construction of the subprojects of the bridge. The work sections of the bridge can be classified into 2 classes, which include substantive work sections and accessory work sections and each class still can be further classified. The classifications of the bridge, subproject and work section are given in Table 1.

The expression of BCICS adopts hybrid coding system, in which the three facets are expressed as A, B and C respectively and the specific classification is expressed based on the decimal system. The coding of BCICS is composed of a letter and a following decimal number code. In order to broaden the expression scope of the coding system and improve the application flexibility of the coding system, the four subsidiary symbols of Uniclass coding system are used in the coding system of this study. The codes from the same facet or from different facets can be grouped together by the four symbols to obtain a new composite definition of the classified information. The four subsidiary symbols and the meaning of each symbol are given in Table 2. Figure 2 shows an application example of BCICS in WBS. From the figure, it can be seen that the WBS based on BCICS can satisfy the requirement that the project work should be broken down easily and advantageously. BCICS has excellent applicability and flexibility for the establishment of WBS and the application of WBS in the risk identification. The fundamental unit suitable for risk identification including the subproject and work section can be defined as RIP (Risk Identification Packages).

Establishing RBS of the large bridge construction: RBS describes the distribution of the risk resources that the project is to be faced with, which is convenient for the risk analysis personnel to identify and assess the risk. Based on the construction characteristics of large bridges and the related research results, all the risks in the construction phase of large bridges can be classified into two classes: the internal risks and external risks by organizing great deal of risk data in the construction phase of large bridges (Zayed *et al*., 2007). The internal risks include the personnel risk, the construction

Table 1: Bridge Construction Information Classification System (BCICS)

Bridge (A)	Subproject (B)	Work section (C)
A1 classification by subject structure system	B1 main stress structures	C1 substantive work sections
A11 girder bridge	B11 substructures	C11 cast-in-place work sections
A111 simply supported girder bridge	B111 foundation	C111 concrete engineering
A112 multi-span continuous girder bridge	B111.1 pile foundation	C112 reinforcing bar engineering
A113 cantilever girder bridge	B111.2 open-cut extended foundation	C113 prestressed construction
A12 arch bridge	B111.3 cylinder pile foundation	C114 masonry construction
A13 suspension bridge	B111.4 cushion cap	C12 precasting and installation work sections
A14 rigid frame bridge	B111.5 open caisson foundation	C121 precasting and transportation of structural members
A15 cable-stayed bridge	B111.6 underground continuous wall foundation	C122 hoisting engineering
A16 combined system bridge	B111.7 combination foundation	C123 assembling engineering
A2 classification by materials of subject structure system	B111.8 other foundation	C124 closure construction
A21 masonry bridge	B112 bridge abutment	C125 incremental launching construction
A22 reinforced concrete bridge	B113 bridge pier	C126 rotation construction
A23 prestressed concrete bridge	B114 bridge bearing	C127 erection work
A24 concrete-filled steel tubular bridge	B12 superstructures	C128 installation work
A3 classification by the properties of the barrier across	B121 girder	C128.1 bearing installation
A31 bridge crossing river	B121.1 plate girder	C128.2 piping installation
A32 bridge crossing valley	B121.2 rib plate girder	C128.3 lighting installation
A33 overpass bridge	B121.2.1 I-shaped girder	C128.4 manufacturing and installment of taut cables
A34 elevated highway bridge	B121.2.2 T-shaped girder	C13 foundation engineering and the other work sections
A4 classification by the position of the carriageway in superstructure	B121.3 box girder	C131 excavation of pile holes
A41 top-bear bridge	B122 bridge deck	C132 pile sinking
A42 half-through bridge	B123 taut cable	C133 open caisson construction
A43 through bridge	B124 bridge tower	C134 earthwork
A5 classification by use	B125 anchorage	C134.1 land leveling
A51 railway bridge	B126 arch ring and arch structure	C134.2 excavation of foundation pit and pipe ditch
A52 highway bridge	B2 bridge floor system	C134.3 grade level filling
A53 agriculture bridge	B21 bridge deck pavement	C134.4 backfilling of foundation pit
A54 pedestrian bridge	B22 water proofing layer	C135 foundation pit engineering
A55 water conveying bridge	B23 drainage	C136 decoration engineering
A6 classification by passing method	B3 accessory structures	C2 accessory work sections
A61 stationary bridge	B31 sound insulation and the dazzle prevention device	C21 general accessory work sections
A62 open-type bridge	B32 ladder way	C211 measuring engineering
A63 floating bridge	B33 bridgehead transition slab	C212 support engineering
A64 submersible bridge	B34 scour prevention structure	C213 scaffolding work
A7 classification by span	B35 lighting facilities	C22 cast-in-place accessory work sections
A71 super-major bridge		C221 formwork engineering
A72 large bridge		C222 arch frame engineering
A73 medium bridge		C223 cantilever construction system
A74 small bridge		C23 precasting and installation accessory work sections
A75 culvert		C231 hoisting system
		C232 assembling system
		C233 incremental launching construction system
		C234 rotation construction system
		C235 catwalk system
		C24 foundation engineering and the other accessory work sections
		C241 cofferdam engineering
		C241.1 soil or rock cofferdam
		C241.2 wooden or bamboo cage cofferdam
		C241.3 steel sheet pile cofferdam
		C241.4 boxed cofferdam
		C242 drilling platform
		C243 island-filling

technology risk, the design technology risk, the materials and equipments risk and the contract risk, which can be further classified into risk factors. The risk factors of the internal risks are as follows:

Table 2: Four subsidiary symbols and the meanings

		Example	
Symbol	Meaning	Composite symbol	Composite definition
+	Being paratactic	A22+A112	Reinforced concrete multi-span continuous girder bridge
:	Being relevant to	B112:A12	Bridge abutment of an arch bridge
<	Being included	B124<A15	Cable-stayed bridge including the bridge tower
>	Including	A15>B124	Cable-stayed bridge including the bridge tower

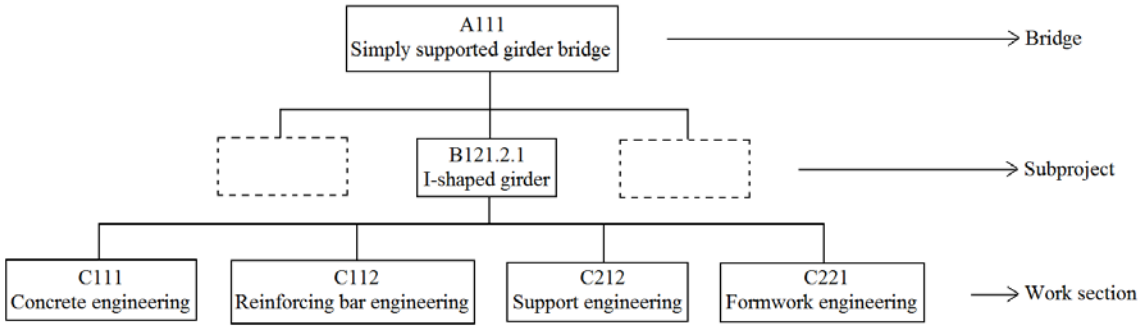

Fig. 2: Application example of BCICS in WBS

- **Personnel risk:**
  - Quality of the general worker (Including psychological diathesis, moral integrity, operation technique and efficiency)
  - Quality of the technical personnel (Including psychological diathesis, moral integrity and technology level)
  - Quality of the management personnel (Including psychological diathesis, moral integrity and management level)
  - Quality of the supervising personnel
  - Unstabitily of the staff
  - Noncooperation of the employer and supervising engineer
  - Other personnel risks
- **Construction technology risk:**
  - Backward construction technology
  - Unreasonable construction technology and scheme
  - Unsuitable protection measures of construction safety
  - Failure of the application of new technology and method
  - Half-baked consideration on the actual condition of the construction site
  - Unfamiliar with the design drawings and design intention
  - Construction not according to the drawing
  - Violating construction standard
  - Insufficient site information and unforeseeable circumstances underground
  - Unreasonable personnel organization and arrangement
  - Unreasonable materials and unreasonable equipment allocation
  - Other construction technology risk
- **Design technology risk:**
  - Adverse effect of the grade of the design department
  - Unsatisfactory quality of the designing materials
  - Validity and legality of the designing materials
  - Deviation of the design from construction
  - Design problems of new structures and new type of bridges
  - Insufficient understanding of the structure characteristics and immature design theory
  - Delay of the examining and approving of the design alteration
  - Other design technology risks
- **Materials and equipments risk:** Raw materials, finished products and semi-manufactured products being in short supply
  - Wrong types and quantity of raw materials, finished products and semi-manufactured products
  - Disqualification of the quality of raw materials, finished products and semi-manufactured products
  - Consumption in the course of transportation, storage and construction
  - Restriction of the local transportation
  - Problems of using special and new materials
  - Delay of supplying and entering the construction site of the construction equipments
  - Disqualification of the construction equipments
  - Insufficient production capacity of the construction equipments
  - Insufficient accessories and fuel of the construction equipments
  - Construction machinery breakdown and the power fault
  - Installation errors and debugging errors of the construction equipments
  - Inadequacy of the equipment maintenance or overloading operations of the construction equipments
  - Instability of the construction equipments and unsafe operation
  - Other materials and equipments risk

- **Contract risk:**
  - Errors of omission of the bill of quantities
  - Errors of the unit price or total price of the project
  - Indeterminate or defective terms of the contract
  - Default of the partner
  - Other contract risks

The external risks include the natural risk, the political legal risk, the economic risk and the social risk, which can be further classified into risk factors. The risk factors of the external risks are as follows:

- **Natural risk:**
  - Bad weather conditions and environment (wind, extreme temperatures, flood, debris flow, earthquake and so on)
  - Undesirable condition of the construction site (instability of water supply, power supply and gas supply)
  - Adverse geographical location
  - Other natural risks
- **Political legal risk:**
  - Variation of the macro policy
  - Discontinuity of the laws and regulations
  - Problems of the construction examination and approval procedure
  - Effect of the local regulations and specifications associated with construction
  - Regional protection policy
  - Injustice of the arbitration for disputing
  - Too much intervention of the government or the department in charge
  - Variation of the relations between the countries
  - Domestic conflict or unrest
  - Other political legal risks
- **Economic risk:**
  - Adverse situation of macro economy
  - Severe currency inflation
  - Difficulty in financing
  - Bad credit of the insurance companies and bank
  - Variation of the local and national tax policy
  - Adjustment of the national interest
  - Increase of the wages and welfare of the staff
  - Other economic risks
- **Social risk:**
  - Disordered social public order
  - Corrupt social morality
  - Too low cultural quality
  - Other social risk

In this study, the expression of RBS adopts the hierarchical structure and the coding system adopts Five Digit System, which include four levels. The first level is expressed as the letter R, whose meaning is the project risk. The second level represents the first grade risk source, in which the internal risk can be expressed as Arabic numeral 1 and the external risk can be expressed as Arabic numeral 2. The third level represents the second grade risk source, which is expressed as the decimal coding system. The fourth level represents the risk factor, which is expressed as sequential coding system. Figure 3 shows an application example of RBS. The RBS coding in the figure represents a risk factor of the materials equipments risk derived from the internal of the project, which is that the raw materials and semi-finished or finished products are not qualified with the quality and specifications.

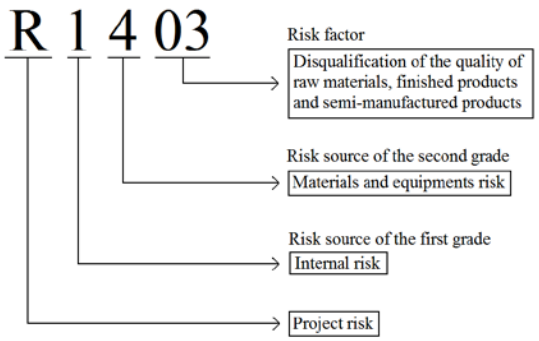

Fig. 3: Application example of RBS

Establishing RBM of the large bridge construction: Based on BCICS, the managers of the project, the risk analysis experts and the related technical personnel can establish a WBS, in which the project works can be broken down into RIP according to the actual conditions of the project, such as the structure type, the project environment, the project scale, the construction period and so on. When the RBM is being established, RIP should be set as the rows of the matrix and the lowest-level risk factors of RBS should be set as the columns of the matrix. Considering the length of the study, only the RBM of the personnel risk and construction technology risk are given in Fig. 4.

Judging the matrix element of RBM: Judging the matrix element of RBM actually is to determine whether a risk factor exists. If the risk factor exists, the corresponding matrix element value is 1 and otherwise, the corresponding matrix element value is 0. As can be seen from the above-mentioned establishing process of the RBM of bridge construction phase, the main function of the RBM is that it can break down the overall risk in the construction phase of the large bridge into work packages of each construction stage of the bridge. That is to say, each risk factor in the RBS is identified by taking RIP as the basic unit. In light of the above characteristics of RBM, in this study, a modified method of Brain Storming was applied to judge the matrix element of RBM. The modified method of Brain Storming can also be called Intellectual Stimulation Method and Free Thinking Method, which was proposed by Osborn A.F. in 1939 (Zheng *et al*., 2008). With this method in the form of meeting, all the participants present their opinions without scruple to

				RBS Risk resource							
				R11 Personnel risk				R12 Construction technology risk			
WBS Risk dentification packages	Classification system code	RIP Name	RIP No.	R1101	R1102	……	R1199	R1201	R1202	……	R1299
			RIP1								
			RIP2								
			RIP3								
			……								
			RIPn								

Fig. 4: RBM of the personnel risk and construction technology risk

solve the problem creatively in a free and cheerful atmosphere. However, in the form of interactive group discussion face to face, the traditional modified method of Brain Storming is often influenced by some factors in the actual operating process, such as the production blocking, evaluation apprehension and social loafing and so on. Therefore, a modified method of Brain Storming was applied in this study, which was called Nominal Group Technique (NGT) and it is a kind of structured team Brain Storming method (Zheng *et al*., 2008). In the process of decision of this method, the discussion of the group member and the interpersonal communication will be restricted and each of the group members can think independently. As well as the traditional meeting, all the group members will attend the meeting; however, the group member will first do the individual decision making.

The basic steps of the judgment on the matrix element of RBM using Nominal Group Technique are as follows:

- The responsible person of the project risk management is in charge of convening the related managers, designers, risk analysis experts, technical personnel and experienced construction personnel of the project to form the risk analysis group and distributing and introducing the materials concerned risk identification to the group members, such as the technical data on the bridge structure, the construction organization design, the human and social environment of the bridge site, the detailed information of the companies involved, the RBM forms and so on. Then the responsible person of the project risk management explains the establishing process of RBM to the group members and determines the objective of this meeting is to identify the overall risk of the project by judging the values of RBM elements.
- The project manager will provide guide to the group members. He should emphasize the necessity of the attendance of each group member and explain the importance of the risk identification.
- Before any discussion, each group member has a certain amount of time and space to think independently and fill out the RBM forms. The group member should provide written instructions on his judgment. If the other risk factors below the second grade risk source exist, the names of the risk factors should be written out.
- Each group member should submit his RBM forms and written instructions to the project manager and then read out his judgment results and the corresponding reason. The project manager is in charge of write down the other risk factors that the group members proposed on the hanging board. Before all the group members complete reading, no discussion should be done on the recorded risk factors.
- Hosted by the project manager, the collective discussion should be conducted inside the group taking RIP as the basic unit, so that each member of the group can make everyone's views on the RBM elements of clear. Meanwhile, the member of the group can compare his views with the others and finally make the evaluation.
- The group members modify their judgment and views and take the other risk factors on the hanging broad as the new risk factors to judge. Then the RBM forms should be filled out again and submitted to the project manager.
- The project manager collects the judgment values of the RBM elements based on the RBM forms submitted by the group members. The value of one element should be determined as the value that was chosen by more group members. However, if the number of the judgment value 0 is equal to the number of the judgment value 1, the project manager can decide the final value of the element by himself. Finally, the statistical results table of RBM should be obtained to get the final judgment results of RBM elements and the risk identification work based on WBS-RBS is completed.

CONCLUSION

For the construction environment of large bridges is complex and there are too much uncertain factors during the course of the construction, it is difficult for

the general method of risk identification to identify the risks wholly and systematically. This study presents a new method of risk identification with modular analysis based on WBS-RBS (Work Breakdown Structure-Risk Breakdown Structure). For the purpose of the better application of this new method in the risk identification of large bridges, a BCICS (Bridge Construction Information Classification System) suitable for construction phase of large bridges was established based on the information classification system of ISO (International Standardization Organization). In order to provide a uniform communication language for the risk analysis personnel, the WBS of the construction of large bridges was established, which was beneficial to the judgment of the matrix elements of the RBM (Risk Breakdown Structure) applying the method of NGT (Nominal Group Technique). The coding system based on BCICS and RBS presented in this study is convenient for the modularized computer storage of the risk information of large bridges in construction phase and has great contribution to establishing the risk database of large bridges in construction phase.

ACKNOWLEDGMENT

The authors would like to acknowledge the financial support received from the National Natural Science Foundation of China (Grant No. 50978234).

REFERENCES

Cho, T. and T.S. Kim, 2008. Probabilistic risk assessment for the construction phases of a bridge construction based on finite element analysis. Finite. Elem. Anal. Des., 44(6-7): 383-400.

David, H., 2003. Research paper using a risk breakdown structure in project management. J. Facil. Manage., 2(1): 85-97.

David, H., G. Sabrina and R. Carlo, 2006. Managing project risk using a cross risk breakdown matrix. Risk Manage., 8: 61-67.

Deco, A. and D.M. Frangopol, 2011. Risk assessment of highway bridges under multiple hazards. J. Risk Res., 14(9): 1057-1089.

Elhag, T.M.S. and Y.M. Wang, 2007. Risk assessment for bridge maintenance projects: Neural networks versus regression techniques. J. Comput. Civ. Eng., 21(6): 402-409.

Geng, B., J. Wang, H. Wang and L. Fan, 2007. Risk assessment system for bridges against vessel impacts. China Civ. Eng. J., 40(5): 34-40.

Greenstein, J., 2011. Planning, design and construction of low-cost roads and bridge accessibility. Transp. Res. Rec., 2203: 135-142.

Gregory, T.H., 2005. Effective Work Breakdown Structures. China Machine Press, Beijing.

Higgins, C., T.K. Daniels, D.V. Rosowsky, T.H. Miller and S.C. Yim, 2005. Assessment and risk ranking of conventionally reinforced concrete bridges for shear. Transp. Res. Rec., 1982: 110-117.

ISO, 1994. Classification of Information in the Construction Industry. Technical Report, ISO/TR14177: 1994 (E). International Standardization Organisation, Geneva.

Ji, B. and Z. Fu, 2010. Analysis of Chinese bridge collapse accident causes in recent years. China Civ. Eng. J., 43(Suppl): 495-498.

Khan, R.A. and T.K. Datta, 2010. Probabilistic risk assessment of fan type cable stayed bridges against earthquake forces. J. Vib. Control, 16(6): 779-799.

Mander, J.B., R.P. Dhakal, N. Mashiko and K.M. Solberg, 2007. Incremental dynamic analysis applied to seismic financial risk assessment of bridges. Eng. Struct., 29(10): 2662-2672.

Padgett, J.E., R. Desroches and E. Nilsson, 2010. Regional seismic risk assessment of bridge network in Charleston, South Carolina. J. Earthqu. Eng., 14(6): 918-933.

Stein, S.M., G.K. Young, R.E. Trent and D.R. Pearson, 1999. Prioritizing scour vulnerable bridges using risk. J. Infrastruct. Syst., 5(3): 95-101.

Stewart, M.G., 2001. Reliability-based assessment of ageing bridges using risk ranking and life cycle cost decision analyses. Reliab. Eng. Syst. Saf., 74(3): 263-273.

Voo, Y.L., P.C. Augustin and T.A.J. Thamboe, 2011. Construction and design of a 50 m single span uhp ductile concrete composite road bridge. Struct. Eng., 89(15-16): 24-31.

Wang, T.M. and T.M.S. Elhag, 2006. Fuzzy TOPSIS method based on alpha level sets with an application to bridge risk assessment. Exp. Sys. Appl., 31(2): 309-319.

Wang, T.M. and T.M.S. Elhag, 2007. A fuzzy group decision making approach for bridge risk assessment. Comput. Ind. Eng., 53(1): 137-148.

Wang, T.M. and T.M.S. Elhag, 2008. An adaptive neuro-fuzzy inference system for bridge risk assessment. Exp. Syst. Appl., 34(4): 3099-3106.

Wang, T.M., J. Liu and T.M.S. Elhag, 2008. An integrated AHP-DEA methodology for bridge risk assessment. Comput. Ind. Eng., 54(3): 512-525.

Xiang, Y., Q. Wu and T. Zhang, 2010. The risk assessment of bridge design based on the AHP-FCE model. China Civ. Eng. J., 43(Suppl 2): 275-280.

Zayed, T., R.E. Minchin, A.J. Boyd, G.R. Smith and M.C. Mcvay, 2007. Model for the physical risk assessment of bridges with unknown foundation. J. Perform. Constr. Facil., 21(1): 44-52.

Zheng, R.Y., X.S. Jian, K.L. Yu and Y.Z. Yang, 2008. Failure assessment of large span cable-stayed-bridge accident during construction based on the eta. Eng. Mech., 25(Suppl): 203-208.