Research Journal of Applied Sciences, Engineering and Technology 6(5): 761-767, 2013
ISSN: 2040-7459; e-ISSN: 2040-7467

Submitted: August 07, 2012 Accepted: September 03, 2012 Published: June 25, 2013

Analyses of Plane-strain Compression Using the Upper Bound Method

Mahir Es-Saheb, Ali Al-Witry and Abdulmohsen Albedah
Department of Mechanical Engineering, College of Engineering, King Saud University, P.O. Box 800, Riyadh 11241, Saudi Arabia

Abstract: Traditional upper bound analyses for plane-strain compression leads to low load prediction values, for a large ratio range of contact Length (L) to thickness (h). These predicted load values are based on deformation fields consisted of rigid regions separated by planes upon which discrete shear occurs. In this study, the relatively simple deformation fields consisted of odd number of triangles such like, 1, 3 and 5, are used. A general minimum solution for this class of upper bounds is derived and found to occur when the base of the center triangle (w) [= 2L/ (n+1)], where n is an odd integer ≥3. Consequently, whether still lower values would occur with this class of field when the ratio(R), of the field triangles side lengths is varied, has been systematically investigated. Thus, the upper bound loads are calculated over a wide range of the ratio (R) and the deformation field parameters. These parameters include the thickness (h) the contact Length (L) and the base of the center triangle (w). It is found that, all the minimum load values occur at unity R ratio and the minimum values of h, L and w. The minimum values obtained for hopt, Lopt and wopt are 1.466, 3.266 and 2.0 units, respectively. Also, the corresponding overall minimum optimal upper bound value found is P/2k = 1.93.

Keywords: Fields, metal forming, plane-strain compression, plasticity, upper bound method

INTRODUCTION

In metal forming, engineering plasticity, offers various methods recommended for predicting the loads needed to effect the shape change desired. These methods include the four distinct approaches namely: uniform work or energy; slab or equilibrium force balance; upper and lower bounds; slip line field.

The calculation of the exact loads or forces to cause plastic flow of metals is often difficult, if not impossible. Exact solutions require that both stress equilibrium and a geometrically self-consistent pattern of flow are satisfied simultaneously everywhere throughout the deforming body and on its surface. Fortunately, limit theorems permit force calculations, which provide values that are known to be either lower or higher than the actual forces. These calculations provide lower or upper bounds. A lower-bound solution will give a load prediction that is less than or equal to the exact load needed to cause a body to experience full plastic deformation. Several texts (Johnson and Mellor, 1973; Calladine, 1969) may be consulted for greater detail on lower bound However, in metal-forming operations, it is of greater interest to predict a force that will surely cause the body to deform plastically to produce the desired shape change. This can be achieved through the use of the upper bound approach. Actually, an upper-bound analysis predicts a load that is at least equal to or greater than the exact load needed to cause plastic flow. Upper-bound analyses focus upon satisfying a yield criterion and assuring that shape changes are geometrically self-consistent. Hence, to avoid time-consuming complexities in calculating the load that is at least large enough to cause plastic flow; it is often resorted to the upper bound approach. Johnson and Mellor (1973) discuss the use of the upper bound theorem in detail as it applies to plane strain operations while (Avitzur, 1968; Caddell and Hosford, 1980, 1983) use an upper bound approach in analyzing a number of ax symmetric operations.

Over the last few decades, since the early works on forming operations by Kudo (1960, 1961) and Rowe (1965), the upper bound method has been in use by a large number of investigators. Amongst those are: Fox and Lee (1989), Na and Cho (1989), Cho and Kim (1990), Mulki and Mizuno (1996), Kimura and Childs (1999), Pater (1999), Garmestani *et al.* (2001) and Chai (2003). Later more related works on the use of upper bound method in some tenacious patterns are reported, notably, the work of Bona (2004), Es-Saheb (2004) and Moller *et al*. (2004), as well as Ebrahimi and Najafizadeh (2004). Also, in the civil engineering field, the upper bound method is widely used in predicting and estimating the loads in the foundations and footings of different shapes, as reported in the last few years, by Zhu and Michalowski (2005), Merifield and Nguyen (2006), Gourvenec *et al*. (2006), Gourvenec (2007), Zhang (2008), Dean (2008) and Yilmaz and Bakir (2009) and most recently by Arabshahi *et al.* (2010), as

Corresponding Author: Mahir Es-Saheb, Department of Mechanical Engineering, College of Engineering, King Saud University, P.O. Box 800, Riyadh 11241, Saudi Arabia

well as Majidi *et al.* (2011) and Veiskarami *et al.* (2011).

In this study, the effect of the deformation field geometry parameters on the upper bound load predictions for plane strain compression operation is investigated and presented. The deformation fields considered are the well-known fields, which consists of a number of triangles. Though, other deformation fields are suitable as long as they are kinematically admissible. Also, the parameters studied, include the number of triangles in the field of deformation involved, the contact Length (L), the thickness (h), the ratio of the triangles lengths (R) and the base length of the center triangle (w). Thus, the effect of these parameters on the derived general minimum upper bound solution occurrence and the corresponding triangles sides' length ratio are systematically investigated. These issues have not been investigated before.

However, for convenience and benefit completion, first, a brief description of the upper bound analysis, the energy dissipation on a plane of discrete shear and traditional upper bounds for plane strain compression will be presented in the next sections.

UPPER-BOUND ANALYSIS

The upper-bound theorem may be stated as flows: Any estimate of the collapse load of a structure made by equating the internal rate of energy dissipation to the rate at which external forces do work in some assumed pattern of deformation will be greater than or equal to the correct load.

The bases of an upper-bound analysis can be summarized as follows:

- An internal flow field is assumed and must account for the required shape change. As such, the field must be geometrically self-consistent
- The energy consumed internally in this deformation field is calculated using the appropriate strength properties of the work material
- The external forces (or stresses) are calculated by equating the external work with the internal energy consumption

For a mathematical proof that such solutions predict loads equal to or greater than the exact load to cause plastic deformation, various sources (Johnson and Mellor, 1973) may be consulted. With such solutions, the assumed field can be checked for complete consistency by drawing a velocity vector diagram, which is commonly called a hodograph.

In applying the upper-bound technique to metalworking operations, several simplifying assumptions are invoked:

- The work material is isotropic and homogeneous
- The effects of strain hardening and strain rate on flow stress are neglected
- Either frictionless or constant shear stress conditions prevail at the tool work piece interface
- Most of the cases considered will be those where the flow is 2 dimensional (plane strain), with all deformation occurring by shear on a few discrete planes. Elsewhere the material is considered to be rigid. If shear is assumed to occur on intersecting planes that are not orthogonal, these planes cannot in reality, be planes of maximum shear stress. Many such fields can be posed and the closer such a field is to the true flow field, the closer the upper-bound prediction approaches the exact solution

ENERGY DISSIPATION ON A PLANE OF DISCRETE SHEAR

Figure 1a shows an element of rigid metal, ABCD, moving at unit velocity, V1 and having unit width into the study. AD is set parallel to yy'. As the element reaches the plane yy' it is forced to change direction, shape and velocity. Thus, to the right of yy' the element has the shape A'B'CD' and velocity V2, at an angle θ2 to the horizontal. Fig. 1b is the hodograph; the absolute velocities on either side of yy' are V1 and V2 and they are drawn from the origin, O. Both V1 and V2 must have the horizontal component. Vx; otherwise, material approaching and leaving yy' would differ in volume; this would violate the concept of incompressibility.

The velocity V*12 is the vector difference between V1 and V2 and is the velocity discontinuity along yy'. It is assumed that V*12 occurs along the line (or plane) yy'.

The rate of energy dissipation on yy' must equal the work per volume times the volume per time crossing yy'. Because deformation is due to shear, the work per volume, w, equals the shear stress τ times the shear strain, γ. Here, τ must be the shear strength, k, of the metal and γ = dy/dx, thus:

$$w = k(dy/dx) \quad (1)$$

The volume crossing yy' in an increment of time, dt, is the length of line, S, along yy' times the depth of the plane perpendicular to yy' (unity) times Vx. Thus:

$$\text{vol/time} = S\ (1)\ Vx \quad (2)$$

Combining Eq. (1) and (2) gives the rate at which work, W, is done to effect this shear deformation:

$$dW/dt = k(dy/dx)\ (SVx) \quad (3)$$

Comparing Fig. 1a and b, dy/dx = V*12 / Vx so:

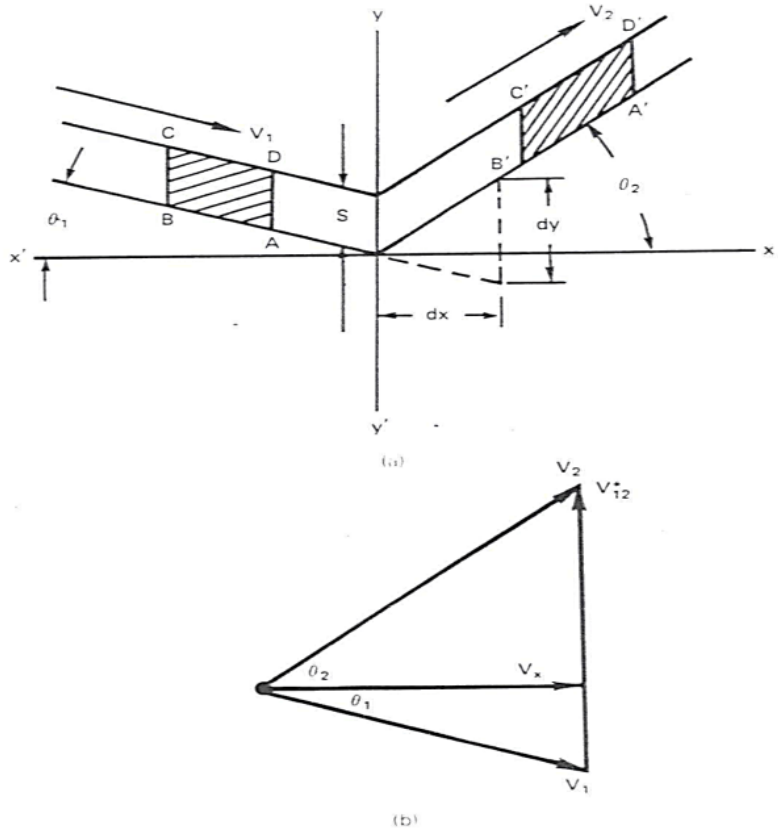

Fig. 1: (a) Basis for analysis of energy dissipation along a plane of intense shear discontinuity and (b) the hodograph or velocity vector diagram

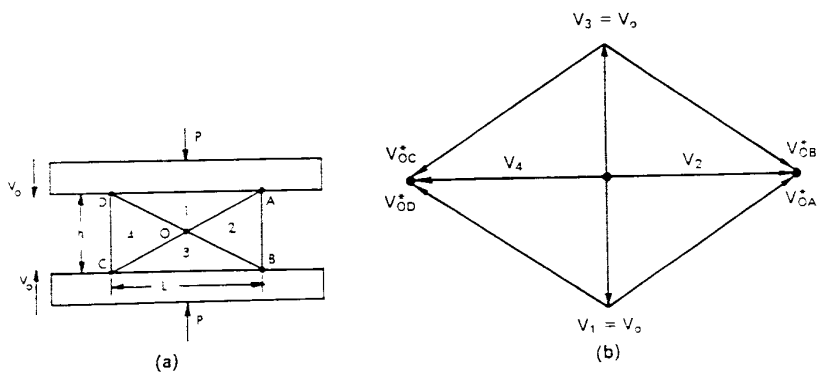

Fig. 2: (a) A proposed upper-bound field and (b) the full hodograph for plane-strain compression with sticking friction, (n = 1), (Caddell and Hosford, 1980)

$$dW/dt = k\ S\ V^*12 \quad (4)$$

For deformation fields involving more than one plane of discrete shear:

$$dW/dt = \Sigma_1^i\ k\ S_i\ V^*_i \quad (5)$$

where, Si and V*i pertain to each individual plane.

Equation (5) is the form used in most problems involving upper bound calculations. It implies that an element deforms in a way that offers maximum plastic resistance.

Most of the flow fields assumed in this study consist of a number of polygons, which are viewed as rigid blocks. This means that the velocity of all the material inside a polygon is the same and is represented on the hodograph by the point that is common to the lines that bound the polygon on the proposed deformation field. The polygons are separated by the lines of velocity discontinuity and these discontinuities

as well as effects of boundary friction must be considered when summing the contributions to the total internal energy dissipation.

TRADITIONAL UPPER BOUNDS FOR PLANE-STRAIN COMPRESSION

For plane-strain operations, as shown earlier, the usual approach to upper bounds is to imagine that all deformation occurs along discrete lines (actually planes in three dimensions). One such field for this problem is shown in Fig. 2a, where the regions AOD and COB are dead-metal zones that move with the same velocity, VO, as the compression platens. Discrete shear occurs on lines AO, BO, CO and DO and the corresponding hodograph is shown in Fig. 2b. With such a traditional upper bound, the rate of internal energy dissipation is k Σ IJ V*IJ where IJ are the lengths of the shear discontinuities in the physical space and V*IJ are the velocity discontinuities. Equating the rate of external work to internal energy dissipation gives:

$$2PLV_O = 4k\ AO\ V^*_{AO} \tag{6}$$

Substituting $AO = ½ (h^2 + L^2)^{1/2}$ and $V^*_{AO} = V_O (h^2 + L^2)^{½} / h$, the upper bound is:

$$P/(2k) = ½ (h/L + L/h) \tag{7}$$

For large values of *L/h*, better upper-bound solutions are obtained with fields consisting of more than one triangle along the work metal-platen interface, the lowest solutions corresponding to an odd number (3, 5 . . .) of triangles. Only with an odd number is there a dead-metal cap in the center, which does not slide against the platens. Figure 3 shows the field consisting of three triangles and the corresponding hodograph, for the upper right quarter of the field. Thus, the general solution is:

$$P/(2k) = 3h/2L + L/2h + w2/2hL - w/2 \tag{8}$$

where, *w* is the base of the center triangle. The lowest value of *P*/2*k* occurs when *w* = *L*/2 and is:

$$P/2k = 3h/2L + 3L/8h \tag{9}$$

A field of five triangles and the corresponding hodograph are shown in Fig. 4. Here it is assumed that AB = BC. With this assumption, the lowest value occurs when *w* = *L*/3 and is:

$$P/2k = 5h/2L + L/3h \tag{10}$$

A general minimum solution for this class of upper bounds is:

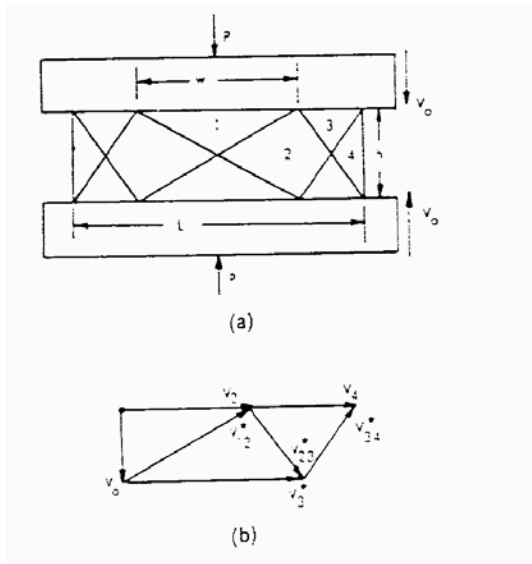

Fig. 3: (a) Upper-bound field and (b) one quarter of hodograph for plane strain compression with sticking friction (n = 3) (Caddell and Hosford, 1980)

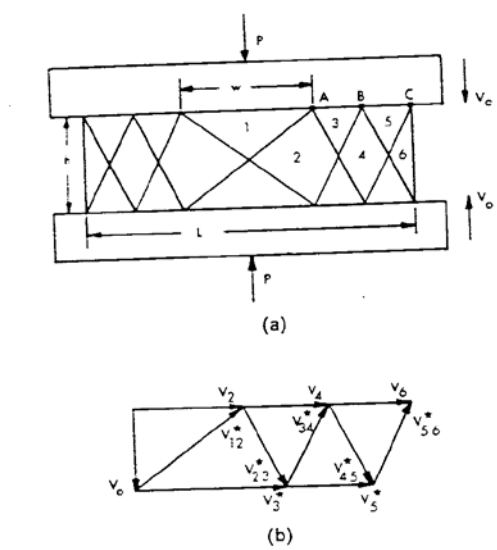

Fig. 4: (a) Upper bound field and (b) one quarter of hodograph for plane strain compression with sticking friction, (n = 5) (Caddell and Hosford, 1980)

$$P/2k = 1/hL\ \{nh2/2 + C\ [L/(n+1)]\ 2\}$$

where,

$$C = (3n + 1)/2 + \Sigma_{i=1}^{i=(n-1)/2} (2i - 1) \tag{11}$$

and *n* is an odd integer >3.

This minimum occurs when *w* = 2*L*/ (*n* + 1). Using somewhat different symbols, definitions, etc., Avitzur (1968) has earlier arrived at a solution that is equivalent to Eq. (11).

Whether still lower values would occur with this class of field when the ratio of AB/BC = R is varied has not been yet investigated. This, as stated above and other issues is the subject of this study.

THE RE-FORMULATION OF UPPER BOUNDS FOR PLANE-STRAIN COMPRESSION

However, to carry out this investigation, the re-derivation of the main governing equations given above is essential. This is needed in order to achieve a general equation for the upper bound loads solution, which incorporates all the influencing parameters. These parameters are: The contact Length (L); the thickness (h); the triangles sides lengths ratio (R) [= AB/BC] and; the base of the center triangle (w).

From Fig. 4a and b and following the same procedure as above and simplify us arrived to the general equation for upper bound solution, given as:

$$P/2k = (5/2)\ (h/L) + 1/\ [4(1+R)^2]\{2(1+R+R^2)\ (L/h) - 2\ (1+R^2)\ (w/h) + 2(1+R+R^2)\ (w^2/hL)\} \quad (12)$$

where, R = AB/BC.
For R = 1, the above equation becomes:

$$P/2k = (5/2)\ (h/L) + (6/16)\ (L/h) - w/\ (4h) + (6/16)\ (w^2/hL) \quad (13)$$

Now, differentiating Eq. (13) w.r.t. w and equate it to zero, gives; 1/ (4h) = (12/16) (w/hL), hence: $w_{opt.}$ = L/3. Then, substituting this value in Eq. (13) gives the minimum upper bound value as:

$$P/2k)_{min.} = (5/2)\ (h/L) + L/(3h) \quad (14)$$

This is the same as equation (10) above.

Again, this is repeated for L and the lowest value of $P/2k)_{min.}$ occurs when:

$$L_{opt} = \{(16/6)\ [(5/2)\ h + (6/16)\ (w^2/h)]\}^{1/2} \quad (15)$$

Similarly, for h the lowest value of $P/2k)_{min.}$ occurs when:

$$h_{opt} = \{(2/5)\ L\ [(6/16)\ L - w/4 + (6/16)\ (w^2/L)]\}^{1/2} \quad (16)$$

RESULTS AND DISCUSSION

Thus, to investigate the effect of the ratio R on the upper bound loads the values of $w_{opt.}$, $L_{opt.}$ And h_{opt}, are first calculated. The values found are $L_{opt.}$ = 3.266 units, (for h's = 1 and w's = 2 units), $h_{opt.}$ = 1.466 units(for L's = 4 and w's = 1 units) and $w_{opt.}$ = 2 units (for h's = 1 and L's = 6 units). Figure 5 to 7 show the effect of R variation on the upper bound loads for the various values of L, h and w respectively. Meanwhile, Fig. 8 and 9 display the variation of the upper bound loads with the thickness for the various values of w and L respectively. Finally, the effect of w on the upper bound loads for the different values of h is given in Fig. 10. In all cases, it is clearly displayed that the minimum upper bound loads, $P/2k)_{min.}$, occur at R = 1. Also, the overall optimum minimum value of the upper bound

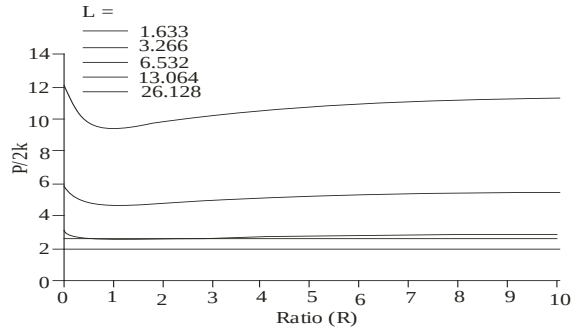

Fig. 5: The ratio R variation effect on the upper bound load P/2k for the various values of L

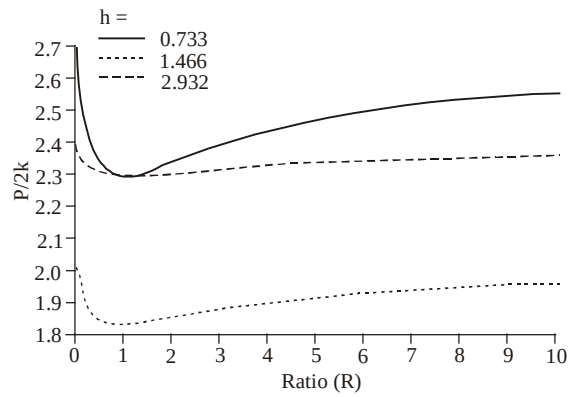

Fig. 6: The ratio R variation effect on the upper bound load P/2k for the various values of h

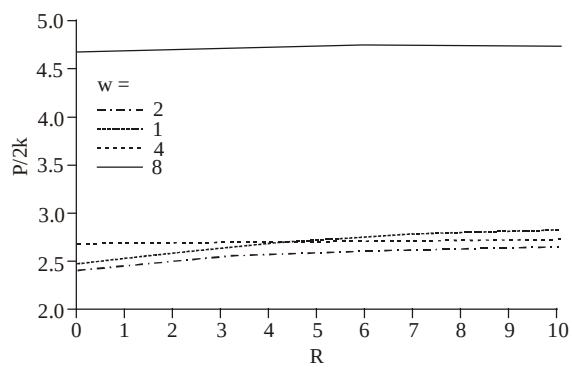

Fig. 7: The ratio R variation effect on the upper bound load P/2k for the various values of w

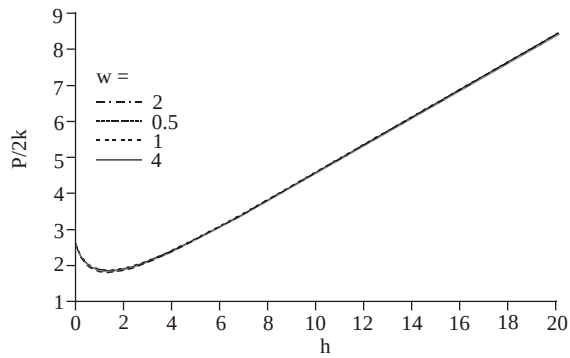

Fig. 8: The effect of the thickness, h, on the upper bound load P/2k for the various values of w

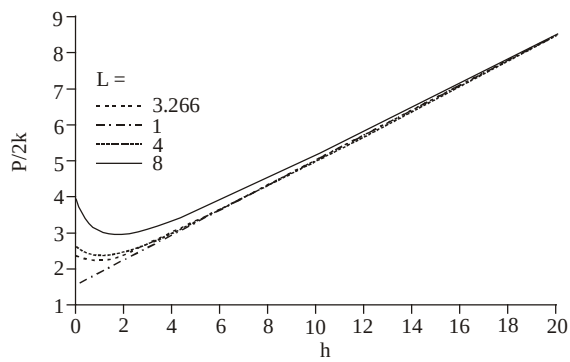

Fig. 9: The effect of the thickness, h, on the upper bound load P/2k for the various values of L

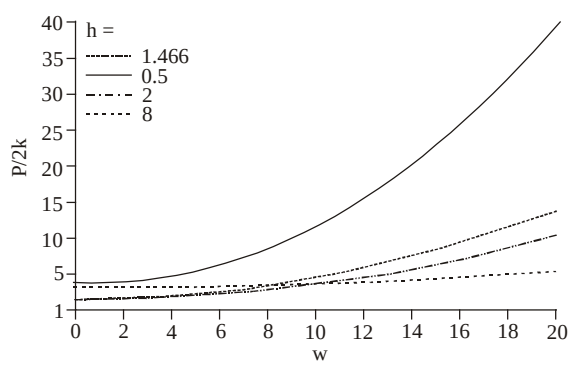

Fig. 10: The effect of the base of the center triangle, w, on the upper bound load P/2k for the various values of h

load, $P/2k)_{min\ opt}$, is found to be 1.93 and occurs at R = 1 and the minimum values of $L_{opt.}$ = 3.266, $h_{opt.}$ = 1.466 and $w_{opt.}$ = 2.

CONCLUSION

For plane-strain compression a traditional upper bound analyses leads to load predictions that are low values, for a large range of the ratio of contact length to thickness. These load estimates are based on deformation fields consisted of rigid regions separated by planes upon which discrete shear occurs. The deformation fields used, which are consisted of odd number of triangles (i.e., 1, 3, 5, etc.), proved to be adequate for such analysis and operations. A general minimum solution for this class of upper bounds is derived and found to occur when w = 2L/ (n+1), where n is an odd integer ≥3. The systematic investigation of whether still lower values would occur with this class of field when the ratio(R) of the field triangles side lengths is varied has been conducted successfully. Thus, the upper bound loads are calculated over a wide range of the ratio (R) and the deformation field parameters such like, the thickness (h) the contact Length (L) and the base of the center triangle (w). It is found that, all the minimum load values occur at unity R ratio. The overall minimum upper bound load is found to be P/2k = 1.93. Furthermore, the minimum values of the investigated parameters are found to be L_{opt} = 3.266, h_{opt} = 1.466 and $w_{opt.}$ = 2.0, respectively and all occur at R = 1.

However, other deformation fields are suitable as long as they kinematically admissible. The comparison of the results of such fields with the obtained values is useful in assessing such operations in practice. An experimental program to investigate these issues is needed to completely verify the analysis.

ACKNOWLEDGMENT

The authors extend their appreciation to the Deanship of Scientific Research at King Saud University for funding the work through the research group project No RGP-VPP-036.

REFERENCES

Arabshahi, M., A.A. Mirghasemi and A.R. Majidi, 2010. Three dimensional bearing capacity of shallow foundations adjacent to slopes using discrete element method. Int. J. Eng., 4(2): 160-178.

Avitzur, B., 1968. Metal Forming: Processes and Analysis. McGraw-Hill, New York, pp: 153-64.

Bona, M., 2004. A simple proof for the exponential upper bound for some tenacious patterns. Adv. Appl. Math., 33(1): 192-198.

Caddell, R.M. and W.F. Hosford, 1980. On slab analyses for upper bound loads. Int. J. Mech. Eng. Ed., 8: 1-6.

Caddell, R.M. and W.F. Hosford, 1983. Metal Forming: Mechanics and Metallurgy. Prentice-Hall, Inc., Englewood Cliffs, N.J.

Calladine, C.R., 1969. Engineering Plasticity. Elmosford, Pergamon Press, New York, pp: 94-104.

Chai, H., 2003. Fracture mechanics analysis of thin coatings under plane strain indentation. Int. J. Solids Struct., 40(3): 591-610.

Cho, N. and K. Kim, 1990. Analysis of the rotational compression of a cylindrical billet in the transverse rolling process. J. Mats. Proc. Technol., 33(2): 203-216.

Dean, E.T.R., 2008. Consistent preload calculations for jackup spudcan penetration in clays. Can. Geotech. J., 45(5): 705-714.

Ebrahimi, R. and A. Najafizadeh, 2004. A new method for evaluation of friction in bulk metal forming. J. Mat. Proc. Technol., 152(2): 136-143.

Es-Saheb, M.H., 2004. Upper bound loads analyses for plane-strain compression. Proceeding of 2nd International Industrial Engineering Conference. 2nd IIEC, Riyadh, Saudi Arabia.

Fox, R. and D. Lee, 1989. Closed die forging analysis of polycarbonate using an upper bound approach. Int. J. Mech. Sci., 31(4): 265-283.

Garmestani, H., S. Lin, B. Adams and S. Ahzi, 2001. Statistical continuum theory for large plastic deformation of polycrystalline materials. J. Mech. Phys. Solids, 49(3): 589-607.

Gourvenec, S., M. Randolph and O. Kingsnorth, 2006. Undrained bearing capacity of square and rectangular footings. Int. J. Geomech., 6(3): 147-157.

Gourvenec, S., 2007. Shape effects on the capacity of rectangular footings under general loading. Ge´otechnique, 57(8): 637-646.

Johnson, W. and P.B. Mellor, 1973. Engineering Plasticity. Van Nostrand Reinhold Co. Inc., New York, pp: 392-401.

Kimura, Y. and T. Childs, 1999. Surface asperity deformation under bulk plastic straining conditions. Int. J. Mech. Sci., 41(3): 283-307.

Kudo, H., 1960. An upper bound approach to plane-strain forging and extrusion-I. Int. J. Mech. Sci., 1(1): 57-83.

Kudo, H., 1961. Some analytical and experimental studies of axi-symmetric cold forging and extrusion-II. Int. J. Mech. Sci., 3(1-2): 91-106.

Majidi, A.R., A.A. Mirghasemi and M. Arabshah, 2011. Three dimensional bearing capacity analysis of shallow foundations using discrete element method. Int. J. Civil Eng., 9(4): 282-292.

Merifield, R.S. and V.Q. Nguyen, 2006. Two-and three-dimensional bearing-capacity solutions for footings on two-layered clays. Geomech. Geoeng. Int. J., 1(2): 151-162.

Moller, J., L. Tran, D. Shrader, J. Douglas and G. Kuhlman, 2004. Augmented upper bound element technique for prediction of temperature and strain in forgings. J. Mat. Proc. Technol., 152(2): 162-175.

Mulki, H. and T. Mizuno, 1996. Contact mechanics of zinc-coated steel sheets. Wear, 199(2): 260-267.

Na, K. and N. Cho, 1989. Analysis of plane-strain rotational compression using the upper bound method. J. Mech. Working Technol., 19(2): 211-222.

Pater, Z., 1999. Numerical simulation of the cross wedge rolling process including upsetting. J. Mater. Proc. Technol., 92-93: 468-473.

Rowe, G.W., 1965. An Introduction to the Principles of Metalworking. Martin's Press, New York, pp: 240-43.

Veiskarami M., A. Eslami and J. Kumar, 2011. End-bearing capacity of driven piles in sand using the stress characteristics method: Analysis and implementation. Can. Geotech. J., 48(10): 1570-1586.

Yilmaz, M.T. and B.S. Bakir, 2009. Capacity of shallow foundations on saturated cohesionless soils under combined loading. Can. Geotech. J., 46(6): 639-649.

Zhang, Q., 2008. Upper bound analysis of bearing capacity of three-dimensional rectangular footing. EJGE, 13(Bund. H): 1-11.

Zhu, M. and R.L. Michalowski, 2005. Shape factors for limit loads on square and rectangular footings. J. Geotech. Geoenv. Eng., 131(2): 223-231.