Research Journal of Mathematics and Statistics 2(2): 81-85, 2010
ISSN: 2040-7505

Submitted Date: March 12, 2010 Accepted Date: April 30, 2010 Published Date: June 25, 2010

Measurement of Reliability Parameters for Solar (PV) System by Employing Boolean Function Technique

[1]Deepankar Sharma, [2]Jitendra Kumar Rana and [1]Sumit Gupta
[1]Department of Mathematics, D.J. College of Engineering and Technology, Modinagar, Ghaziabad, India
[2]Department of Mathematics, NAS (P.G.) College, Meerut

Abstract: In this study, the performance of the solar photovoltaic (PV) system integrated with greenhouse has been discussed. In this model, the author has been used algebra of logics to evaluate reliability and mean time to failure of this solar PV system. The reliability parameters of this system have obtained in two different cases: (1) when failures follow weibull time distribution. (2) When failures follow exponential time distribution. A numerical example with its graphical illustration has also been appended at the end to highlight important results of the study.

Key words: Algebra of logics, boolean function, solar system

INTRODUCTION

The power produced by the PV system is used to operate the required heating/cooling equipments inside the greenhouse. A greenhouse may be defined as a sophisticated structure, providing ideal conditions for satisfactory plant growth and production throughout the year. To maintain favorable conditions in the greenhouse during off/pre and past harvesting some additional sources are required. The solar PV system is one of the energy sources, which work at the lowest cost. The block diagram of solar PV system has been shown in Fig. 1. The various components of the system are as follows:

- Solar Panel
- Logic based charge controller
- Battery bank
- Converter DC/AC

Solar panel: A 1.2 KWP photovoltaic system has been integrated to greenhouse for operating all equipments for heating and cooling. Each module has an effective area of 0.72 M^2 and produces 75-peak watt power (at 1000 w/m^2 solar irradiance and 25ºC cell temperature). There are 16 modules in the complete system to get the required amount of voltage and current.

Logic based intelligent solar charge controller: The logic based solar charge controller controls the charging of battery. It ensures that when the battery gets completely changed, the charging current to the battery bank is stooped and similarly when the battery voltage falls below a threshold value, the charging of the battery is restarted. This is important to prevent over charging the battery bank and also to ensure that when battery voltage falls below a predefined value, they are recharged. This is important to ensure long battery life.

Battery bank: The battery bank is the principal energy storage device to ensure continuous supply even when the solar panel is unable to produce any power (under low light intensity conditions or during night time). This battery bank may have upto 12 batteries, each rated at 6V, 180Ah. The batteries used are lead acid type and are deep cycle batteries, i.e. they can discharged more of there stored energy while still maintaing long life.

DC/AC grid interactive sine-wave inverter: To drive the AC loads a DC/AC converter rated at 3.0KVA and providing 220V/50Hz AC is used.

In this study, the performance of the solar photovoltaic (PV) system integrated with greenhouse has been discussed. In this model, the author has been used algebra of logics to evaluate reliability (Cluzeau *et al.*, 2008) and mean time to failure of this solar PV system.

The associated assumptions are as follows:

- Initially, all the equipments are good and operable.
- The state of each component and of the whole system is either good or fail.
- The states of all components of the system are statistically independent.
- The failure times of all components are arbitrary.

Corresponding Author: Deepankar Sharma, Department of Mathematics, D.J. College of Engineering and Technology, Modinagar, Ghaziabad, India

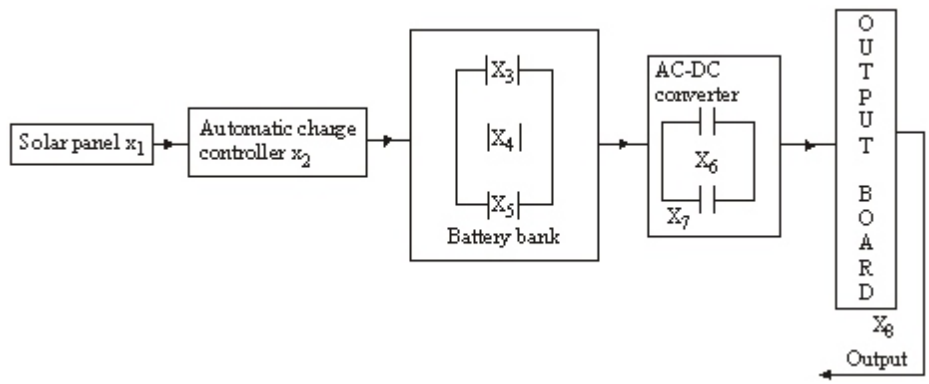

Fig. 1: Represents the configuration of solar (PV) system under consideration

- Supply between any two components of the system is hundred percent reliable.
- There is no repair facility.
- The reliability of each component is known in advance.
- Battery bank consists of three batteries in parallel redundancy.
- There are two parallel redundant DC/AC converters.

MATERIALS AND METHODS

This study was conducted at Dept. of Mathematics, N.A.S. (PG) College, Meerut, India during May 2009. The results obtained are studied at Dept. of Mathematics, D.J. College of Engineering and Technology, Modinagar, Ghaziabad, India during June 2009.

In this study, the authors have been used Boolean function technique (Gupta and Agarwal, 1983) to formulate mathematical model of the considered system. Various paths of successful operation of the system have been obtained. The reliability of considered system and MTTF (Zhimin *et al*., 2005) has been evaluated. These results can be used to obtain various reliability parameters of the system having similar configurations.

The conditions of capability of successful operation (Gupta and Agarwal, 1983) of considered solar PV system, integrated with greenhouse, in terms of logical matrix (Lai *et al*., 2005) are expressed as follows:

$$F(x_1, x_2, ---x_8) = \begin{bmatrix} x_1 & x_2 & x_3 & x_6 & x_8 \\ x_1 & x_2 & x_3 & x_7 & x_8 \\ x_1 & x_2 & x_4 & x_6 & x_8 \\ x_1 & x_2 & x_4 & x_7 & x_8 \\ x_1 & x_2 & x_5 & x_6 & x_8 \\ x_1 & x_2 & x_5 & x_7 & x_8 \end{bmatrix} \quad (1)$$

By the application of algebra of logics, Eq. (1) may be written as

$$F(x_1, x_2, ---x_8) = \left[x_1\ x_2\ x_8 \wedge f(x_3, x_4, ---x_7)\right] \quad (2)$$

Where;

$$f(x_3, x_4, ---x_7) = \begin{bmatrix} x_3 & x_6 \\ x_3 & x_7 \\ x_4 & x_6 \\ x_4 & x_7 \\ x_5 & x_6 \\ x_5 & x_7 \end{bmatrix} \quad (3)$$

Substituting the following in Eq. (3):

$$T_1 = \begin{bmatrix} x_3 & x_6 \end{bmatrix} \quad (4)$$

$$T_2 = \begin{bmatrix} x_3 & x_7 \end{bmatrix} \quad (5)$$

$$T_3 = \begin{bmatrix} x_4 & x_6 \end{bmatrix} \quad (6)$$

$$T_4 = \begin{bmatrix} x_4 & x_7 \end{bmatrix} \quad (7)$$

$$T_5 = \begin{bmatrix} x_5 & x_6 \end{bmatrix} \quad (8)$$

and

$$T_6 = \begin{bmatrix} x_5 & x_7 \end{bmatrix} \quad (9)$$

We obtain

$$f(x_3, x_4, ---x_7) = \begin{bmatrix} T_1 \\ T_2 \\ T_3 \\ T_4 \\ T_5 \\ T_6 \end{bmatrix} \quad (10)$$

Using orthogonalisation algorithm, Eq. (10) may be written as:

$$f(x_3, x_4, ---x_7) = \begin{bmatrix} T_1 & & & & & \\ T_1' & T_2 & & & & \\ T_1' & T_2' & T_3 & & & \\ T_1' & T_2' & T_3' & T_4 & & \\ T_1' & T_2' & T_3' & T_4' & T_5 & \\ T_1' & T_2' & T_3' & T_4' & T_5' & T_6 \end{bmatrix} \quad (11)$$

Now, using algebra of logics, we have:

$$T_1 = \begin{bmatrix} x_3 & x_6 \end{bmatrix}$$

$$\therefore\ T_1' = \begin{bmatrix} x_3' & \\ x_3 & x_6' \end{bmatrix}$$

$$\therefore\ T_1' T_2 = \begin{bmatrix} x_3' & \\ x_3 & x_6' \end{bmatrix} \wedge \begin{bmatrix} x_3 & x_7 \end{bmatrix}$$

$$= \begin{bmatrix} x_3 & x_6' & x_7 \end{bmatrix} \quad (12)$$

Similarly, we obtain the following:

$$T_1' T_2' T_3 = \begin{bmatrix} x_3' & x_4 & x_6 \end{bmatrix} \quad (13)$$

$$T_1' T_2' T_3' T_4 = \begin{bmatrix} x_3' & x_4 & x_6' & x_7 \end{bmatrix} \quad (14)$$

$$T_1' T_2' T_3' T_4' T_5 = \begin{bmatrix} x_3' & x_4' & x_5 & x_6 \end{bmatrix} \quad (15)$$

and

$$T_1' T_2' T_3' T_4' T_5' T_6 = \begin{bmatrix} x_3' & x_4' & x_5 & x_6' & x_7 \end{bmatrix} \quad (16)$$

Using Eq. (12) through (16), Eq. (11) gives:

$$f(x_3, x_4, ---x_7) = \begin{bmatrix} x_3 & x_6 & & & \\ x_3 & x_6' & x_7 & & \\ x_3' & x_4 & x_6 & & \\ x_3' & x_4 & x_6' & x_7 & \\ x_3' & x_4' & x_5 & x_6 & \\ x_3' & x_4' & x_5 & x_6' & x_7 \end{bmatrix} \quad (17)$$

Using Eq. (17) in Eq. (2), we obtain:

$$F(x_1, x_2, ---x_8) = \begin{bmatrix} x_1 & x_2 & x_3 & x_6 & x_8 & & & \\ x_1 & x_2 & x_3 & x_6' & x_7 & x_8 & & \\ x_1 & x_2 & x_3' & x_4 & x_6 & x_8 & & \\ x_1 & x_2 & x_3' & x_4 & x_6' & x_7 & x_8 & \\ x_1 & x_2 & x_3' & x_4' & x_5 & x_6 & x_8 & \\ x_1 & x_2 & x_3' & x_4' & x_5 & x_6' & x_7 & x_8 \end{bmatrix} \quad (18)$$

Since, R.H.S. of Eq. (18) is disjunction of pair-wise disjoint conjunctions, therefore the reliability of considered system is given by:

$$\begin{aligned} R_S &= \Pr\{F(x_1, x_2, ---x_8) = 1\} \\ &= R_1 R_2 R_8 [R_3 R_6 + S_6 R_3 R_7 + S_3 R_4 R_6 + \\ &\quad S_3 S_6 R_4 R_7 + S_3 S_4 R_5 R_6 + S_3 S_4 R_6 R_5 R_7] \end{aligned}$$

Where, R_i is the reliability of the component corresponding to system state x_i and

$$S_i = 1 - R_i,\ \forall i = 1, 2, ---8$$

Thus, on simplifying above expression, we obtain:

$$\begin{aligned} R_s &= R_1 R_2 R_8 [R_3 R_6 + R_3 R_7 + R_4 R_6 + R_4 R_7 \\ &+ R_5 R_6 + R_5 R_7 + R_3 R_4 R_6 R_7 + R_3 R_4 R_5 R_6 \\ &+ R_3 R_4 R_5 R_7 + R_3 R_5 R_6 R_7 + R_4 R_5 R_6 R_7 \\ &- R_3 R_6 R_7 - R_3 R_4 R_6 - R_3 R_4 R_7 - R_4 R_6 R_7 \\ &- R_3 R_5 R_6 - R_4 R_5 R_6 - R_3 R_5 R_7 \\ &- R_5 R_6 R_7 - R_3 R_4 R_5 R_6 R_7] \end{aligned} \quad (19)$$

Some particular cases:

Case I: When reliability of each component is R

In this case, setting $R_i(i = 1,2,---8) = R$ in Eq. (19), we get:

$$R_S = 6R^5 - 9R^6 + 5R^7 - R^8 \quad (20)$$

Case II: When failure rates follow weibull time distribution:

Let λ_i be the failure rate of component corresponding to state x_i of the system and it follows weibull time distribution (Pandey and Mendus, 1995), then:

$$R_i = \exp\left(-\lambda_i t^{\alpha}\right)$$

where α is a real positive parameter.

Putting this value in Eq. (19), we obtain

$$R_{SW}(t) = \sum_{i=1}^{11} \exp\left(-a_i t^{\alpha}\right) - \sum_{j=1}^{10} \exp\left(-b_i t^{\alpha}\right) \quad (21)$$

where, α is a real positive parameter and

$$a_1 = c + \lambda_3 + \lambda_6$$
$$a_2 = c + \lambda_3 + \lambda_7$$
$$a_3 = c + \lambda_4 + \lambda_6$$
$$a_4 = c + \lambda_4 + \lambda_7$$
$$a_5 = c + \lambda_5 + \lambda_6$$
$$a_6 = c + \lambda_5 + \lambda_7$$
$$a_7 = c + \lambda_3 + \lambda_4 + \lambda_6 + \lambda_7$$
$$a_8 = c + \lambda_3 + \lambda_4 + \lambda_5 + \lambda_6$$
$$a_9 = c + \lambda_3 + \lambda_4 + \lambda_5 + \lambda_7$$
$$a_{10} = c + \lambda_3 + \lambda_5 + \lambda_6 + \lambda_7$$
$$a_{11} = c + \lambda_4 + \lambda_5 + \lambda_6 + \lambda_7$$
$$b_1 = c + \lambda_3 + \lambda_6 + \lambda_7$$
$$b_2 = c + \lambda_3 + \lambda_4 + \lambda_6$$
$$b_3 = c + \lambda_3 + \lambda_4 + \lambda_7$$
$$b_4 = c + \lambda_4 + \lambda_6 + \lambda_7$$
$$b_5 = c + \lambda_3 + \lambda_5 + \lambda_6$$
$$b_6 = c + \lambda_4 + \lambda_5 + \lambda_6$$
$$b_7 = c + \lambda_3 + \lambda_5 + \lambda_7$$
$$b_8 = c + \lambda_4 + \lambda_5 + \lambda_7$$
$$b_9 = c + \lambda_5 + \lambda_6 + \lambda_7$$
$$b_{10} = c + \lambda_3 + \lambda_4 + \lambda_5 + \lambda_6 + \lambda_7$$

and

$$c = \lambda_1 + \lambda_2 + \lambda_8$$

Case III: When failure rates follow exponential time distribution:

Exponential time distribution is a particular case of Weibull time distribution for and is very useful in numerous practical problems. So, putting $\alpha = 1$ in Eq. (21), we get:

$$R_{SE}(t) = \sum_{i=1}^{11} \exp.\left(-a_i t\right) - \sum_{i=1}^{10} \exp.\left(-b_j t\right) \quad (22)$$

Also, an important reliability parameter namely, mean time to failure, in this case, is given by:

$$M.T.T.F = \int_0^{\infty} R_{SE}(t)dt = \sum_{i=1}^{11}\left(\frac{1}{a_i}\right) - \sum_{j=1}^{10}\left(\frac{1}{b_j}\right) \quad (23)$$

Numrical computation: For a numerical computation, consider the values:

- λ = 0.001, α = 2 and t = 0,1,2,—10. Using these values in Eq. (21), we compute Table 1.
- λ = 0.001 and t = 0,1,2,—10. Using these values in Eq. (22), we compute Table 1.
- λ = 0, 0.01, 0.02, —0.10. Using these values in Eq. (23), we compute Table 2.

RESULTS AND DISCUSSION

In this study, we have evaluated reliability and mean time to failure (Pandey and Mendus, 1995) for the considered solar system by employing Boolean function technique (Gupta and Agarwal, 1983). Also, we have computed some particular cases to improve practical utility of the system. Gupta and Agarwal (1983) have done the reliability analysis of complex system but no care was given to structural redundancy. On failure of main working unit, the whole system can also fail. So, for the better analysis we must have to consider the concept of structural redundancy. Thus we have done some better analysis of considered system of practical utility.

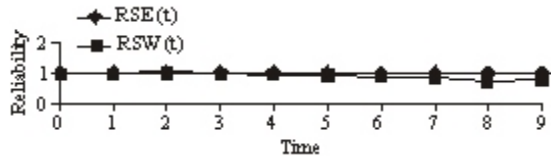

Fig. 2: Represents the way in which reliability of considered system decreases with time in case, failures follow Weibull and Exponential time distributions

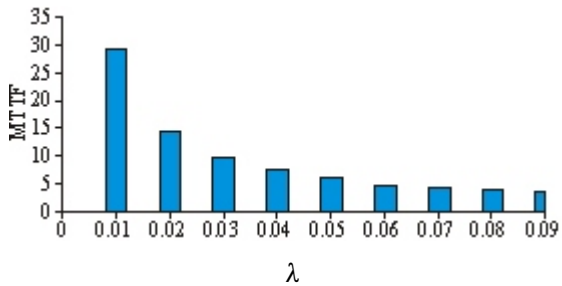

Fig. 3: Represents the way in which mean time to failure of considered system decreases with increase in failure rate

Figure 2 shows the values of reliability function with increase in time. Analysis of Fig. 2 reveals that reliability function $R_{SW}(t)$ decreases catastrophically in the beginning but thereafter it decreases constantly. The value of $R_{SE}(t)$ remains better as compared of $R_{SW}(t)$.

Figure 3 shows the values of MTTF with increase in failure rate. A critical examination of Fig. 3 yields that the value of MTTF decreases rapidly as we make increase in the values of failure rate λ but thereafter it decreases in a constant manner.

CONCLUSION

In conclusion, we observe that we could improve system's overall performance by using the concept of redundancy. Boolean function technique is easier (Cluzeau *et al.*, 2008) as compared with the other techniques to obtain reliability parameters. We have compared the values of reliability function, in case; failures follow weibull and exponential time distributions. By using the structural redundancy, we obtain the better values of reliability and mean time to failure for considered system.

NOTATIONS

The list of notations is as follows:

x_1	:	State of solar panel
x_2	:	State of logic based charge controller
x_i (i = 3,4,5)	:	States of batteries in battery bank
x_6, x_7	:	States of DC/AC converter
x_8	:	State of output board.
x_i, $\forall i$	:	is 1 for good, is 0 for bad.
x'_i	:	Negation of x_i.
$\wedge$ / $\vee$	:	Conjunction / Disjunction.
R_S	:	Reliability of the system as a whole.
R_i	:	Reliability of the component corresponding to system state x_i
$R_{SW}(t)$ / $R_{SW}(t)$	:	Reliability functions when failure follows Weibull/exponential time distribution.
M.T.T.F.	:	Mean time to system failure.

REFERENCES

Cluzeau, T., J. Keller and W. Schneeweiss, 2008. An efficient algorithm for computing the reliability of consecutive-k-out-of-n:F Systems. IEEE TR. Rel., 57(1): 84-87.

Gupta, P.P. and S.C. Agarwal, 1983. A boolean algebra method for reliability calculations. Microelectron. Rel., 23: 863-865.

Lai, C.D., M. Xie and D.N.P. Murthy, 2005. On some recent modifications of weibull distribution. IEEE TR. Rel., 54(4): 563-569.

Pandey, D. and J. Mendus, 1995. Cost analysis, availability and MTTF of a three state standby complex system under common-cause and human failures. Microelectron. Rel., UK, 35: 91-95.

Zhimin, H., T.L. Han and H.O. Eng, 2005. A probabilistic approach to evaluate the reliability of piezoelectric micro-actuators. IEEE TR. Rel., 54(1): 44-49.